DERATECH 瑞铁机床

Хуудас металлын иж бүрэн шийдэл

Мэргэжлийн / Тогтвортой / Шилдэг

Deratech Machine Tool (Suzhou) Corp., Ltd нь Хятад улсын хуудас металл боловсруулах салбарын тэргүүлэгч томоохон үйлдвэрлэгч юм. Белги улсын хөрөнгө оруулагчтай тус компани нь Жянсу мужийн Тайцан хотод, Шанхай хоттой залгаа байршилд үйл ажиллагаа явуулдаг бөгөөд CNC нугалагч пресс, нугалагч автомат, лазер зүсэгч болон хуудас металл боловсруулах бусад төрлийн тоног төхөөрөмжийг Европ технологийн стандартын дагуу үйлдвэрлэдэг. Тус компанийн бүтээгдэхүүнүүд Хятадын дотоодын болон олон улсын зах зээлд өргөнөөр борлуулагдаж байна. Бизнесийн үйл ажиллагаа тасралтгүй өргөжин хөгжихийн хэрээр үйлдвэрийн хүчин чадал шинэ түвшинд хүрч байна.

Deratech нь илүү өртөг багатай, удаан эдэлгээтэй, өндөр чанартай хуудас металл боловсруулах тоног төхөөрөмж хөгжүүлэхийг эрхэм зорилгоо болгон ажиллаж, технологийн дэвшилд суурилсан бүтээгдэхүүний тасралтгүй шинэчлэлийг хийснээр компанийн хөгжлийг хурдасгаж байна. Сүүлийн жилүүдэд Deratech-ийн бүтээгдэхүүнүүд салбартаа улам бүр хүлээн зөвшөөрөгдөж, хэрэглэгчдийн хэрэгцээ шаардлагад илүү сайн нийцсээр байна. Цахилгаан серво CNC нугалагч пресс болон нугалагч автоматуудыг зах зээлд дараалан нэвтрүүлснээр компани нь бүтээгдэхүүний төгөлдөржилтийг сайжруулж, өргөн хүрээний хэрэглэгчдэд илүү их үнэ цэн бүтээхэд төвлөрөн ажиллаж байна.

Өнөөдрийн байдлаар Deratech нь 100 гаруй патент эзэмшдэг бөгөөд үүнээс 8 нь шинэ бүтээлийн патент юм. Мөн Жянсу мужийн мэргэшсэн, нарийн технологит жижиг дунд үйлдвэр, Жянсу мужийн өндөр ба шинэ технологийн аж ахуйн нэгж, Жянсу мужийн аж ахуйн нэгжийн технологийн төв, Жянсу мужийн өндөр түвшний хуудас металл CNC суурь машинуудын стратегийн шинээр хөгжиж буй салбарын стандартчлалын туршилтын нэгж, Жянсу мужийн ухаалаг, уян хатан хуудас металл тоног төхөөрөмжийн инженерийн судалгааны төв зэрэг олон цол, үнэлгээг хүртсэн. Түүнчлэн CNC нугалагч пресст хамаарах улсын болон салбарын стандартын шинэчлэл боловсруулах ажилд идэвхтэй оролцож ирсэн.

“Made in China 2025” зорилтын хүрээнд Deratech нь цаашид ч тасралтгүй урагшилж, тууштай хөгжих стратегийг баримтлан ажиллах болно. Хэрэглэгчидтэйгээ хамт өсөн хөгжиж, урт хугацаанд найдвартай хамтран ажиллах нь Deratech-ийн хэрэглэгчдэдээ өгсөн үнэнч амлалт юм.

2025 оноос Монгол Улсын зах зээл дээр ЧПМ ХХК-тай хамтран ажиллаж эхэлсэн бөгөөд ингэснээр хэрэглэгчдэд суурь машины зөвлөгөө, сургалт, сервис үйлчилгээ зэргийг илүү ойроос, шуурхай хүргэх боломж бүрдэж байна.

Catalogue

EPP
Цахилгаан серво CNC нугалагч пресс
……P1

UBB-D
Гибрид CNC нугалагч пресс
……P10

TAM-S
Гидравлик CNC нугалагч пресс
……P23

BCI
Сорох үйлдэлтэй автомат нугалах төв
……P33

RBC
Хөдөлгөөнт робот нугалах систем
……P41

RBC
Суурин робот нугалах систем
……P42

FMS
Хуудас металл нугалах уян хатан боловсруулах систем
……P43

SUPERA "Fiber Laser"
Шилэн лазер зүсэгч суурь машин
……P49

SUPERH "Fiber Laser"
Шилэн лазер зүсэгч суурь машин
……P54

SUPERL "Fiber Laser"
Том ширээтэй шилэн лазер зүсэгч суурь машин
……P58

SUPERS "Fiber Laser"
Нэг ширээтэй шилэн лазер зүсэгч суурь машин
……P62

TE "Fiber Laser"
Шилэн лазер зүсэгч суурь машин
……P65

SUPER S-F
Лазер зүсэлт ба ороомоглох шугам
……P68
FMC
Лазер зүсэлтийн уян хатан боловсруулах нэгж
……P71
FMC
Автомат ачилт, буулгалт
……P72

FMS
Лазер зүсэлтийн уян хатан боловсруулалтын систем
……P73

PAC
CNC гидравлик дүүжин хутгат хайч
……P74

VAC
CNC гидравлик гильотин хайч
……P80

DAS
CNC серво туррет цоолборлох машин
……P87

FMC
Автомат штамплах уян хатан боловсруулалтын нэгж
……P97

FMS
Хуудас хайчлах уян хатан боловсруулах систем
……P98

DERATECH
瑞铁机床
苏州瑞铁激光科技有限公司

EPP
Цахилгаан серво CNC нугалагч пресс

EPP-130/4100 загвар

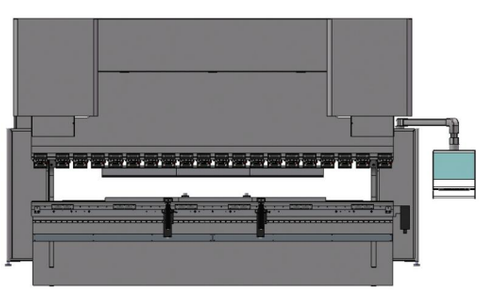

EPP-50/1650 **загвар**

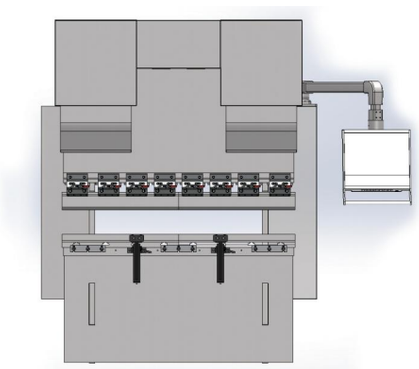

EPP-30/1250 **загвар**

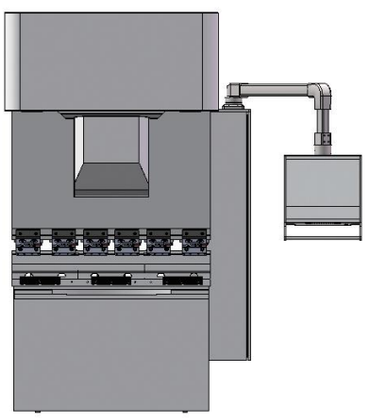

Шинэ бүтээлийн патентын дугаар ZL202011465863.8

Энэхүү цахилгаан серво CNC нугалагч нь дэвшилтэт загварын шийдэлтэй, өөрийн шинэ бүтээлийн патент бүхий олон хөтлөгч хосолсон хүч дамжуулгын бүтэцтэй. Энэ нь эрчим хүчний хэмнэлт өндөр, байгаль орчинд ээлтэй, өндөр нарийвчлалтай шинэ үеийн суурь машин юм.

Эрчим хүчний хэмнэлт

Цахилгаан серво CNC нугалагч нь зөвхөн бодит ачаалалд тохирсон эрчим хүч ашигладаг. Механик дамжуулалтын үр ашиг 95 хувь хүртэл тул ачаалалгүй буцах үед эрчим хүчний зарцуулалт маш бага байдаг. Иймээс нийт эрчим хүчний хэмнэлт өндөр байдаг.
Харин гидравлик нугалагч пресс нь гидравлик тосоор дамжуулан ажилладаг тул тос халж, эрчим хүчний алдагдал үүсдэг. Мөн машин ажиллахгүй үед ч мотор сул зогсолтоор эрчим хүч зарцуулсаар байдаг.

Байгаль орчинд ээлтэй

Цахилгаан серво технологи нь гидравлик тос огт ашиглахгүй. Иймээс тос асгарах, хаягдал тос болон шингэний бохирдол үүсэх эрсдэл байхгүй.

Өндөр үр ашиг

Хурдсах болон удаашрах хөдөлгөөн, мөн багажны доод байрлалын удирдлагыг CNC серво хөдөлгүүр болон шпинделийн дамжуулга гүйцэтгэдэг. Үүний үр дүнд суурь машин хурдан хариу үйлдэл үзүүлж, нэгж хугацаанд гүйцэтгэх ажлын хэмжээ нэмэгдэн, үйлдвэрлэлийн бүтээмж хоёр дахин өсдөг.

Өндөр нарийвчлал

Гидравлик прессийн хувьд тос халснаар системийн ажиллагаанд нөлөөлж, нарийвчлал буурдаг. Харин CNC серво цахилгаан хөдөлгүүртэй нугалагч нь серво хөдөлгүүр болон шпинделийн дамжуулгаар шууд удирдагддаг тул дулааны нөлөө маш бага байдаг. Ингэснээр удаан хугацаанд тогтвортой, давтагдах өндөр нарийвчлалыг хадгална.

Хурдан хавчих төхөөрөмж

Өндөр нарийвчлалтай хурдан хавчигчтай тул багажийг дооpоос нь болон хажуу талаас нь суурилуулах, солих боломжтой. Ингэснээр багаж солих хугацааг үр дүнтэйгээр богиносгож, үйлдвэрлэлийн бүтээмжийг нэмэгдүүлэхээс гадна илүү их ачаалал даах чадвартай

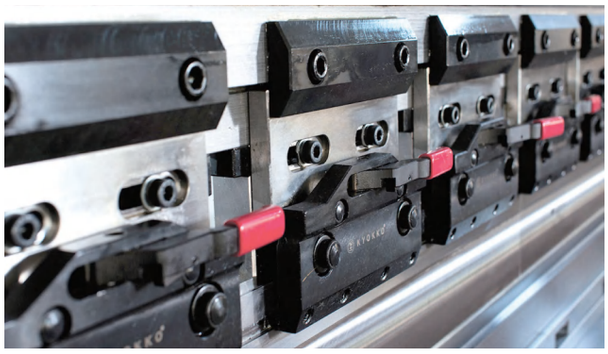

Энгийн арын тулаасны бүтэц

30–50 тонн хүчин чадалтай загварт стандартШинэлэг, өвөрмөц хийцтэй бүтэц бөгөөд олон шатлалт зогсоох шийдлээр байрлал тогтоох хүрээг өргөтгөсөн.

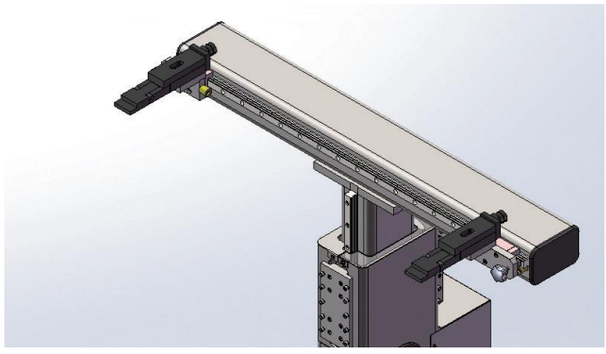

Тогтвортой арын тулаасны бүтэц

60–160 тонн хүчин чадалтай загварт стандарт. Хос шугаман чиглүүлэгчтэй бүтэц нь байрлал тогтоох хамгийн өндөр нарийвчлалыг хангана. Олон шатлалт зогсоох хийц нь байрлал тогтоох хүрээг нэмэгдүүлнэ

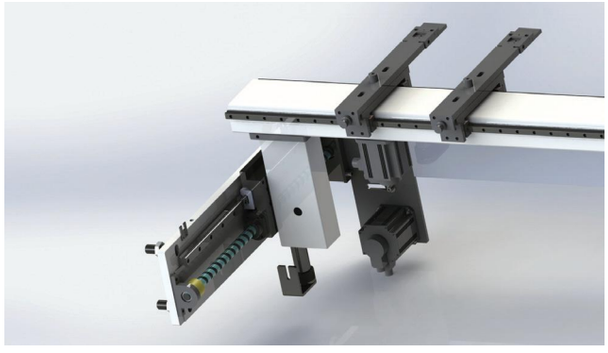

Салдаг урд тулгуур тавцан

100–130 тонн хүчин чадалтай загварт стандарт. Тулгуур тавцан нь шугаман чиглүүлэгчийн дагуу чөлөөтэй шилжих боломжтой бөгөөд хүссэн байрлалд тогтоон ашиглах боломжтой

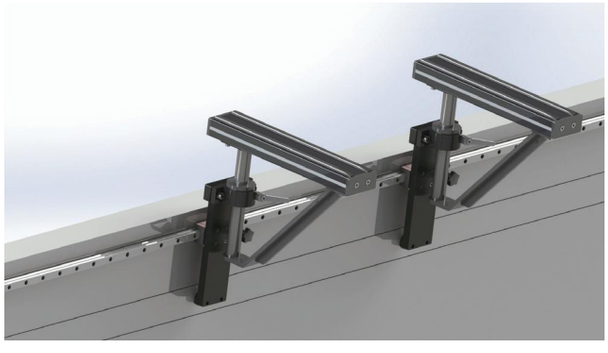

Тогтмол тулгуур тавцан

50–70 тонн хүчин чадалтай загварт стандарт.Хөнгөн жинтэй, шугамлаг хийцтэй тул шилжүүлэх, ашиглахад хялбар.

Механик компенсацийн төхөөрөмж

CNC системээр удирдагддаг тул нугалах нарийвчлал үргэлж тогтвортой байна..

Мэдрэгч

5 микрон хүртэлх нарийвчлалтай бөгөөд зэрэгцээ хэмжилтийн маш өндөр хурдыг хангана.

Автомат тослох систем

Автомат ажиллагаатай тосолгооны систем нь тосыг урьдчилан тохируулсан хэмжээгээр суурь машины нарийвчлалтай дамжуулгын эд ангиудын тослох цэгүүдэд тодорхой хугацаанд шахаж өгдөг.

Ингэснээр үрэлтийг багасгаж, элэгдлээс сэргийлж, гадаргууг зэврэлтээс хамгаалан, тоос шороо нэвтрэхээс тусгаарлаж, харьцах гадаргууны ашиглалтын хугацааг уртасгана.

Дээд гулсуур ба винтен гол хоорондын тусгай холболтын механизм

Зүүн болон баруун талын винтен гол нь холхивчны үүрээр дамжин суурь рамтай нягт холбогдсон бөгөөд гулсуур хавтан нь самрын суурь болон бөмбөлгөн жийргэвчээр дамжин винтен голын самартай шарнир холбоотой байна. Энэхүү хийц нь тэгш өнцөгт чиглүүлэгчийн дэд холбоосын өөрөө тослох шинж чанартай уялдан тохируулга хийх боломж олгож, дээд гулсуур хазайх эсвэл тэнцвэргүй ачаалал үүсэх үед механик болон цахилгаан гэмтлээс шалтгаалан винтен гол гэмтэх, хугарах эрсдэлийг ихээхэн бууруулна. Ингэснээр винтен гол найдвартай хамгаалагдаж, суурь машины жигд, тогтвортой ажиллагаа хангагдана.

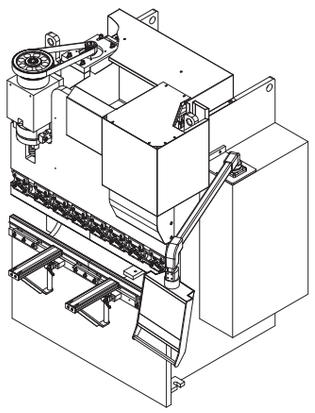

Олон хөтлөгч хосолсон хүч дамжуулгын бүтэц технологи

Ачаалал, хийцийн деформаци, тэнцвэргүй ачаалал зэрэг хүчин зүйлсийн нөлөөгөөр Цахилгаан серво нуглагч нь ихэвчлэн бага тонн хүчин чадалтай байдаг бөгөөд өндөр тонн хүчин чадалд хүрэхэд тодорхой техникийн саад бэрхшээлүүд оршсоор ирсэн.

Олон хөтлөгч хосолсон хүч дамжуулгын бүтэц технологийг анх удаа нэвтрүүлснээр нугалагчийн даах ачааллыг мэдэгдэхүйц нэмэгдүүлж, цахилгаан серво технологийг хуудас металл нугалах салбарт ашиглах хүрээг улам өргөжүүлнэ.

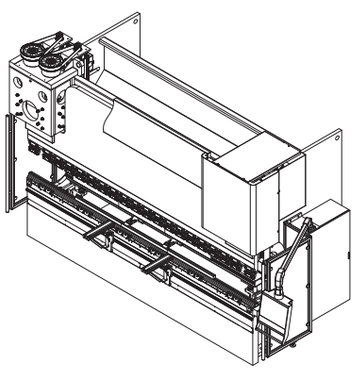

CNC УДИРДЛАГА

DH15P CNC нугалагч прессийн удирдлагын систем

15 инчийн өндөр гүйцэтгэлтэй мэдрэгчтэй дэлгэцтэй удирдлагын самбартай.
6+1 тэнхлэг стандарт байдлаар суурилагдсан.
Өндөр хурдны бодит цагийн EtherCAT өгөгдлийн шугам ашигладаг тул системийг хялбар өргөтгөх боломжтой.
Нугалах ажиллагааны өндөр нарийвчлалтай.
Эрчим хүчний үр ашиг сайтай.
Ажиллах хурд өндөр, бүтээмж сайтай.
Жижиг оврын эд ангийн нарийвчлалтай нугалалт хийхэд тохиромжтой.
Системийн автомат тосолгооны тохиргоотой.
Гараар эргүүлдэг удирдлагатай .
USB 2.0 төрлийн 4 порттой.
RS485 төрлийн нэг серийн порттой.
Тоног төхөөрөмжийн шинэчлэлгүйгээр тэнхлэгийн тоог өргөтгөх боломжтой бөгөөд хамгийн ихдээ 10 тэнхлэг дэмжинэ.
Системийн санах ой 4GB DDR3L, хадгалах багтаамж 64GB SSD.
24V DC тэжээлийн хүчдэлээр ажиллана.

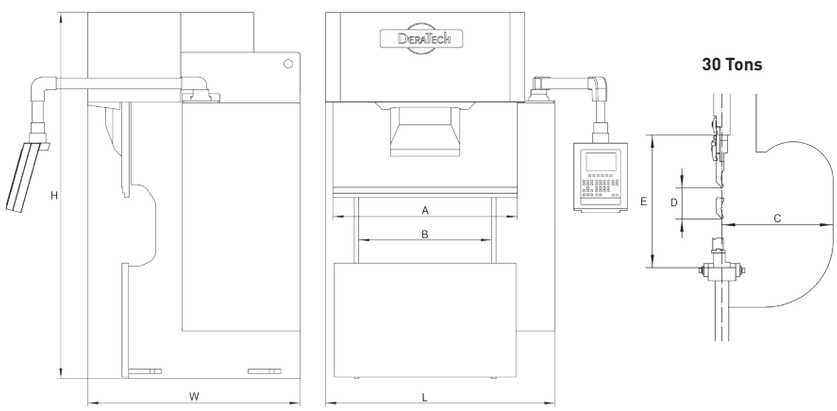

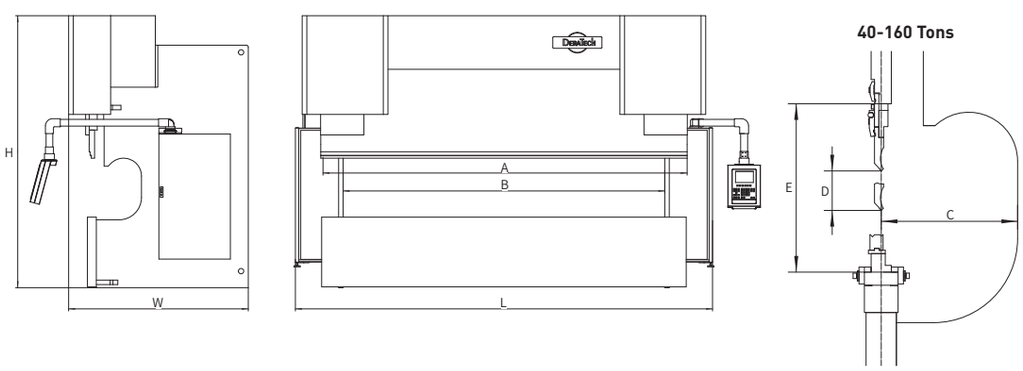

Суурь машины үзүүлэлтүүд - **EPP**

	A	B	C	D	E								L	W	H		
Загвар	Хүч (кН)	Нуглах урт (мм)	Багана хоорондын зай (мм)	Бэлдэц байрлах гүн (мм)	Цилиндрийн явалт (мм)	Нээгдэх өндөр (мм)	Үндсэн чадал (кВт)	Дундаж чадал (кВт)	X тэнхлэгийн явалт (мм)	R тэнхлэгийн явалт (мм)	Хамгийн их хурд (мм/сек)			Гадна хэмжээ (мм)			Жин Кг
											Ойртох хурд	Ажлын хурд	Буцах хурд	Урт	Өргөн	Өндөр	
EPP-30/1250 ★	300	1250	900	200	180	430	19.3	1.1	450	140	200	0-30	200	1650	1450	2610	3500
EPP-40/1300 ★	400	1300	900	300	200	470	2×15.7	2.3	450	140	200	0-30	200	1880	1610	2490	4400
EPP-50/1650 ★	500	1650	1200	300	200	470	2×19.3	2.4	450	140	200	0-30	200	2180	1610	2490	4800
EPP-60/2050 ★	600	2050	1700	300	200	470	2×24.1	2.6	450	200	200	0-30	200	2680	1610	2560	5400
EPP-70/2500	700	2500	2000	300	200	470	2×24.1	2.7	450	200	200	0-30	200	2990	1610	2545	6800
EPP-110/2500	1100	2500	2000	400	250	525	4×19.3	2.7	600	200	200	0-30	200	3000	1860	3035	10200
EPP-110/3200	1100	3200	2700	400	250	525	4×19.3	2.7	600	200	200	0-30	200	3900	1860	3035	11600
EPP-110/4100	1100	4100	3600	550	250	540	4×19.3	2.7	600	200	200	0-30	200	4800	2010	3050	13500
EPP-130/2500	1300	2500	2000	400	250	525	4×24.1	2.8	600	200	200	0-30	200	3000	1860	3035	10300
EPP-130/3200	1300	3200	2700	400	250	525	4×24.1	2.8	600	200	200	0-30	200	3900	1860	3035	11700
EPP-130/4100	1300	4100	3600	550	250	540	4×24.1	2.8	600	200	200	0-30	200	4800	2010	3050	13900
EPP-130/5100	1300	5100	4600	550	250	540	4×24.1	2.8	600	200	200	0-30	200	5600	2010	3050	17000
EPP-130/6100	1300	6100	5600	550	250	540	4×24.1	2.8	600	200	200	0-30	200	6800	2010	3120	19200
EPP-160/2500	1600	2500	2000	400	250	525	4×24.1	2.8	600	200	150	0-30	150	3000	2000	3150	11800
EPP-160/3200	1600	3200	2700	400	250	525	4×24.1	2.8	600	200	150	0-30	150	3900	2000	3150	13200
EPP-160/4100	1600	4100	3600	400	250	525	4×24.1	2.8	600	200	150	0-30	150	4800	2000	3150	15500
EPP-160/5100	1600	5100	4600	400	250	525	4×24.1	2.8	600	200	150	0-30	150	5600	2010	3200	19000
EPP-160/6100	1600	6100	5600	400	250	525	4×24.1	2.8	600	200	150	0-30	150	6800	2010	3250	21000

Тухайн загварын хүснэгтэд механик компенсацийн төхөөрөмж байхгүй. ★

UBB-D
Hybrld CNC нугалагч

Дэвшилтэт загвар, хийцийн шийдэлтэй, зах зээлд урьд өмнө байгаагүй шинэ түвшний бүтээл бөгөөд тос-цахилгаан систем хосолсон, бие даасан патентлагдсан нугалах технологитой.

CBB-D
Hybrid CNC Нугалгч

CBB-35/1250D model

CBB-70/2500D model

БҮТЭЭГДЭХҮҮНИЙ ОНЦЛОГ

Босоо чиглэлд хурдан суурилуулж, салгах хурдан хавчих төхөөрөмж

Өндөр нарийвчлалтай хурдан бэхэлгээтэй тул багажийг хавчигчийн доод болон хажуугийн хоёр чиглэлээс суурилуулах, солих боломжтой. Ингэснээр багаж солих хугацааг мэдэгдэхүйц богиносгож, үйлдвэрлэлийн бүтээмжийг нэмэгдүүлэхийн зэрэгцээ илүү өндөр ачаалал даах чадварыг хангана.

Бат бөх арын тулаасны бүтэц

Хос шугаман чиглүүлэгчтэй хийц нь шилжилт болон зогсолтыг өндөр нарийвчлалтай гүйцэтгэнэ. Олон шатлалт тулах хийц нь байрлалыг зөв, тогтвортой тогтоох хүрээг нэмэгдүүлнэ.

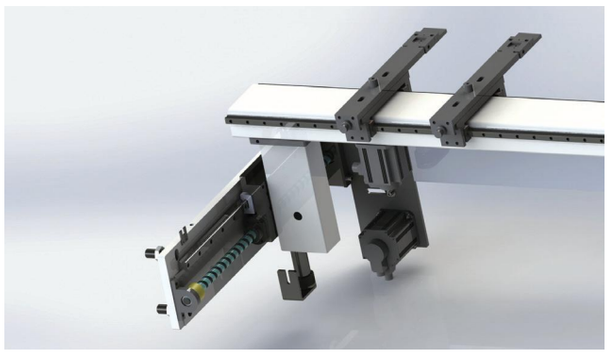

Энгийн арын тулаасны бүтэц

30–50 тонн хүчин чадалтай загварт стандарт шинэлэг, өвөрмөц хийцтэй бөгөөд олон шатлалт тулах шийдлээр байрлал тогтоох хүрээг өргөтгөсөн.

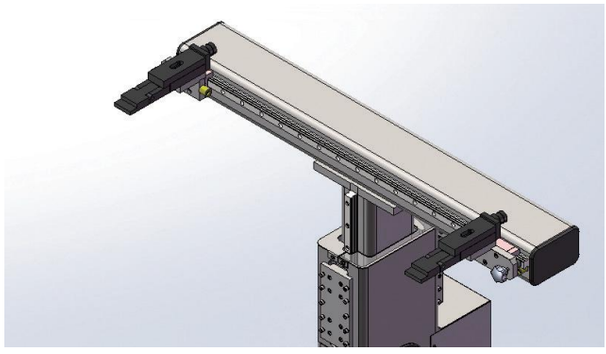

Деформацийн компенсацийн хянах төхөөрөмж

Деформацийн хэмжээг өндөр нарийвчлалтай хэмжиж, буцаан хянах (feedback) боломжтой тул нугалах ажиллагааны нарийвчлалыг хангана. Мөн стандарт бус бэлдэцтэй мөргөлдөхөөс үүдэх саад, мэдрэх нэгжийн алдагдлыг үр дүнтэйгээр урьдчилан сэргийлнэ.

Механик компенсацийн төхөөрөмж

CNC системээр удирдагддаг тул нугалах нарийвчлал байнга тогтвортой байна.

Салдаг урд тулгуур тавцан

UBB-D загварт стандарт тулгуур тавцан нь шугаман чиглүүлэгчийн дагуу шилжиж, хүссэн байрлалд тогтоон ашиглах боломжтой.

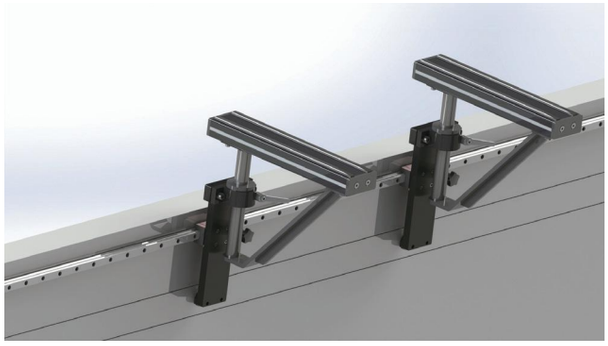

Хос серво тос-цахилгаан хосолсон технологи

Патентын дугаар: 2017112435900

Зүүн болон баруун талд байрлах серво мотор, серво насосны нэг иж бүрдлээр Y1, Y2 тэнхлэгийн хурдан доошлох, нугалах болон буцах хөдөлгөөнийг удирдана. Хөдөлгөөн жигд, хурдан бөгөөд хариу үйлдлийн хурд нь пропорциональ хавхлагаар удирддаг загвараас давуу, дуу чимээ багатай..

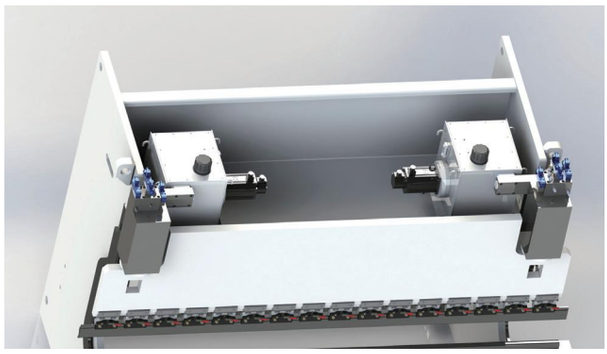

CNC Систем

Швейцарын Cybelec CT12 CNC удирдлага
UBB-D загварт стандарт

12 инчийн мэдрэгчтэй дэлгэцтэй. EasyBend хуудсаар нэг үйлдлээр удирдах боломжтой. Интерактив гарч ирэх дохиоллын цонхтой.
Нугалах өнцөг, үндсэн даралт болон деформацийн компенсацийг автоматаар тооцоолно. Нугалах алхмуудыг автоматаар тооцоолно.
Олон шатлалт нугалах дараалал, бэлдэцийн өнцөг, даралт болон компенсацийн тохиргоог хадгалах боломжтой. Бэлдэцийн огтлолын дүрсийг хуруугаар зурах боломжтой.

Швейцарын Cybelec CT8 CNC удирдлага
CBB-D загварт стандарт

8 инчийн резистив мэдрэгчтэй дэлгэцтэй. Том товчлууруудтай тул мэдрэгчтэй удирдлага хийхэд хялбар. Нэг дамжлагат нугалах процесс дэмжинэ. Интерактив гарч ирэх дохиоллын цонхтой. Нугалах өнцөг, үндсэн даралт зэрэг нугалах өгөгдлийг автоматаар тооцоолно.
USB 2.0 интерфэйс 1 ширхэгтэй. Оффлайн программчлалын програм хангамжийг сонголтоор суурилуулах боломтой.

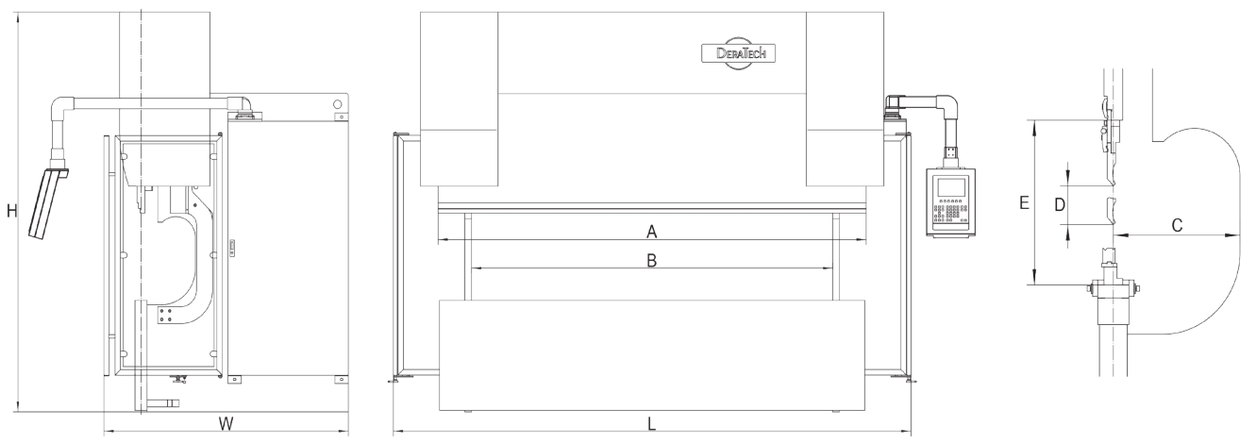

Суурь машины үзүүлэлтүүд - CBB/UBB

		A	B	C	D	E		X	R							
Загвар	Хүч	Нуглах урт	Багана хоорон дын зай	Бэлдэц байрлах гүн	Цилиндрийн явалт	Нээгдэх өндөр	Үндсэн чадал	тэнхлэгийн явалт	тэнхлэгийн явалт	Хамгийн их хурд (мм/сек)			Гадна хэмжээ (мм)			Жин Кг
										Ойртох хурд	Ажлын хурд	Буцах хурд	Урт	Өргөн	Өндөр	
	(кН)	(мм)	(мм)	(мм)	(мм)	(мм)	(кВт)	(мм)	(мм)							
CBB-35/1250D ★	350	1250	900	200	120	385	4.4	450	140	300	0-20	250	1650	1210	2245	2900
CBB-50/1650D ★	500	1650	1200	300	120	385	2×4.4	450	140	300	0-20	250	2180	1340	2385	4300
CBB-60/2050D ★	600	2050	1700	300	120	385	2×4.4	450	200	300	0-20	250	2680	1340	2385	4700
CBB-70/2500D	700	2500	2000	300	120	400	2×4.4	450	200	300	0-20	250	2990	1370	2385	5900
UBB-80/2500D	800	2500	2000	300	160	425	2×4.4	450	200	300	0-20	250	2990	1470	2410	6100
UBB-100/3200D	1000	3200	2700	400	200	475	2×4.4	450	200	300	0-15	220	3700	1550	2645	7800
UBB-110/2500D	1100	2500	2000	400	225	500	2×4.4	600	200	300	0-15	220	3010	1670	2720	7900
UBB-110/3200D	1100	3200	2700	400	225	500	2×4.4	600	200	300	0-15	220	3710	1670	2720	9000
UBB-110/4100D	1100	4100	3600	500	225	500	2×4.4	600	200	300	0-15	220	4610	1770	2720	10900
UBB-130/2500D	1300	2500	2000	400	225	500	2×4.4	600	200	300	0-15	220	3010	1670	2720	7900
UBB-130/3200D	1300	3200	2700	400	225	500	2×4.4	600	200	300	0-15	220	3710	1670	2720	9000
UBB-130/4100D	1300	4100	3600	500	225	500	2×4.4	600	200	300	0-15	220	4610	1770	2720	11300
UBB-130/5100D	1300	5100	4600	400	225	500	2×4.4	600	200	200	0-15	160	5610	1820	2960	15200
UBB-130/6100D	1300	6100	5600	400	225	500	2×4.4	600	200	200	0-15	160	6610	1820	3110	17700
UBB-160/3200D	1600	3200	2700	400	200	475	2×4.4	600	200	300	0-15	200	3720	1700	2685	9800
UBB-160/4100D	1600	4100	3600	500	200	475	2×4.4	600	200	300	0-15	200	4620	1700	2685	11500
UBB-170/2500D	1700	2500	2000	400	225	500	2×4.4	600	200	300	0-15	200	3030	1680	2720	8800
UBB-170/3200D	1700	3200	2700	400	225	500	2×4.4	600	200	300	0-15	200	3730	1680	2720	10100
UBB-170/4100D	1700	4100	3600	500	225	500	2×4.4	600	200	300	0-15	200	4630	1790	2720	12100
UBB-170/5100D	1700	5100	4600	400	225	500	2×5.5	600	200	180	0-15	130	5630	1800	2960	17000
UBB-170/6100D	1700	6100	5600	400	225	500	2×5.5	600	200	180	0-15	130	6630	1800	3160	20000
UBB-230/2500D	2300	2500	2000	420	225	500	2×5.5	600	200	160	0-15	160	3040	1700	2720	10500
UBB-230/3200D	2300	3200	2700	420	225	500	2×5.5	600	200	160	0-15	160	3750	1700	2720	11800
UBB-230/4100D	2300	4100	3600	420	225	500	2×5.5	600	200	160	0-15	160	4650	1700	2720	13700
UBB-230/5100D	2300	5100	4600	420	225	500	2×5.5	600	200	150	0-15	150	5640	1880	3060	18600
UBB-230/6100D	2300	6100	5600	420	225	500	2×5.5	600	200	150	0-15	150	6640	1880	3210	21600
UBB-250/2500D	2500	2500	2000	400	250	525	2×5.5	600	200	150	0-15	150	3050	1920	2975	12100
UBB-250/3200D	2500	3200	2700	400	250	525	2×5.5	600	200	150	0-15	150	3750	1920	2975	14000
UBB-250/4100D	2500	4100	3600	400	250	525	2×5.5	600	200	150	0-15	150	4650	1920	2975	16000
UBB-250/5100D	2500	5100	4600	400	250	525	2×7.9	600	200	130	0-15	130	5650	1920	3125	21200
UBB-250/6100D	2500	6100	5600	400	250	525	2×7.9	600	200	130	0-15	130	6650	1920	3325	24600
UBB-320/3200D	3200	3200	2700	400	300	575	2×5.5	600	200	120	0-12	130	3930	2110	3205	17700
UBB-320/4100D	3200	4100	3600	400	300	575	2×5.5	600	200	120	0-12	130	4830	2110	3205	20300
UBB-320/5100D	3200	5100	4600	400	300	575	2×7.9	600	200	100	0-12	110	5830	2150	3690	26100
UBB-320/6100D	3200	6100	5600	400	300	575	2×7.9	600	200	100	0-12	110	6830	2150	3855	30400

Тухайн загварын үзүүлэлтийн хүснэгтэд механик компенсацийн төхөөрөмж багтаагүй. ★

UBB-D
Tandem Press Brake

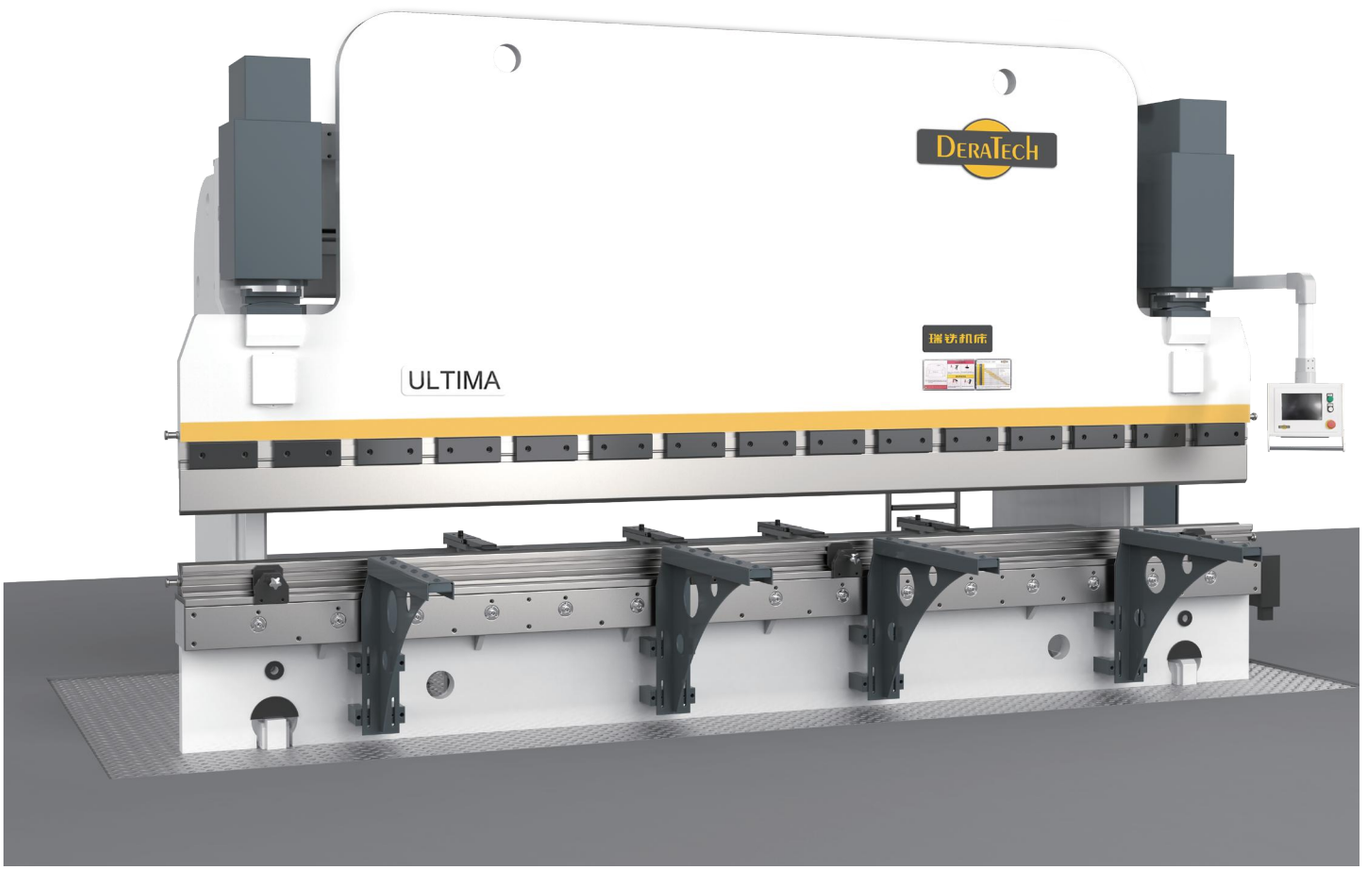

The first to apply dual-servo oil-electric hybrid technology to large-tonnage CNC press brakes, with stable and reliable movements and more prominent energy-saving effects.

UBB-D
Tandem Press Brake

It can work both together and independently. Widely used in mechanical engineering, street lamp poles, power poles, aluminum curtain walls, decorative decoration and other related industries. Suitable for processing large metal plates, supplemented by auxiliary bending devices such as front push material, back push material, side discharge material or follow-on bracket material, easily bending large workpieces, reducing the labor intensity of workers, and can run independently separately when bending small pieces, greatly improving the bending efficiency.

PRODUCT FEATURES

Mechanical Crowning Device

The CNC control system controls the mechanical compensation table to ensure bending accuracy.

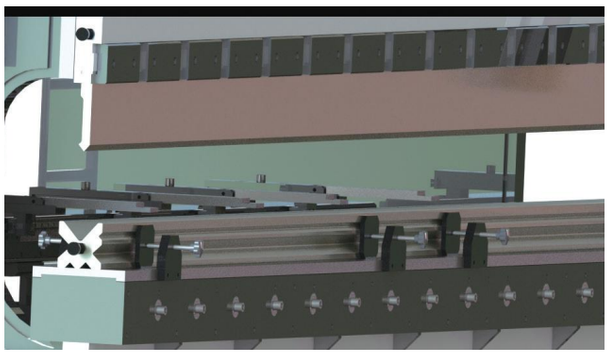

Tooling

Integral hardened for durability.

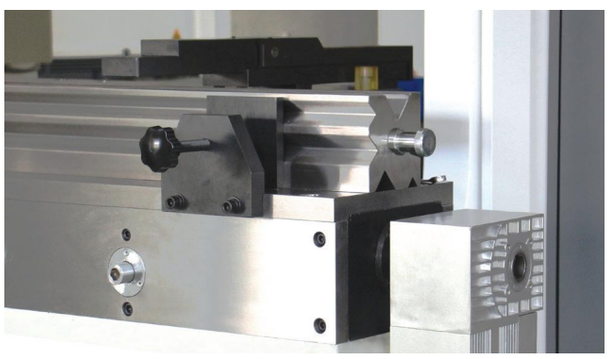

Backgauge System

Servo motor driven ball screw, fast speed, high positioning accuracy; multi-stage stop design, increase the positioning range; modular design, the number of control axes can be optional from single axis to multi-axis.

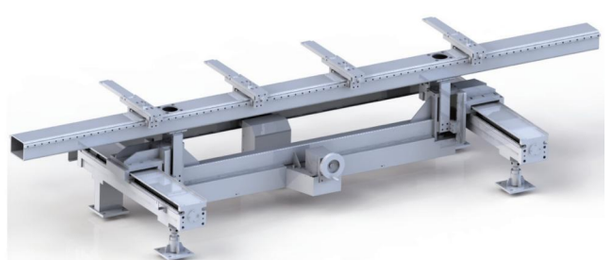

Scientific Structural Design

Full computer-aided design and verification to ensure rigidity of the equipment. Standard configuration of 3+1 axes, Y1-Y2, X-axis and W-axis.

CNC System

Switzerland Cybelec CT12

- 12" touch screen
- "EasyBend" page operation single action
- Interactive pop-up alarm box
- Automatic calculation of bending angle, main pressure and deflection compensation
- Automatic calculation of bending steps
- Multi-step bending sequence, product angle, pressure and compensation control can be stored
- Finger drawing of workpiece cross-sections

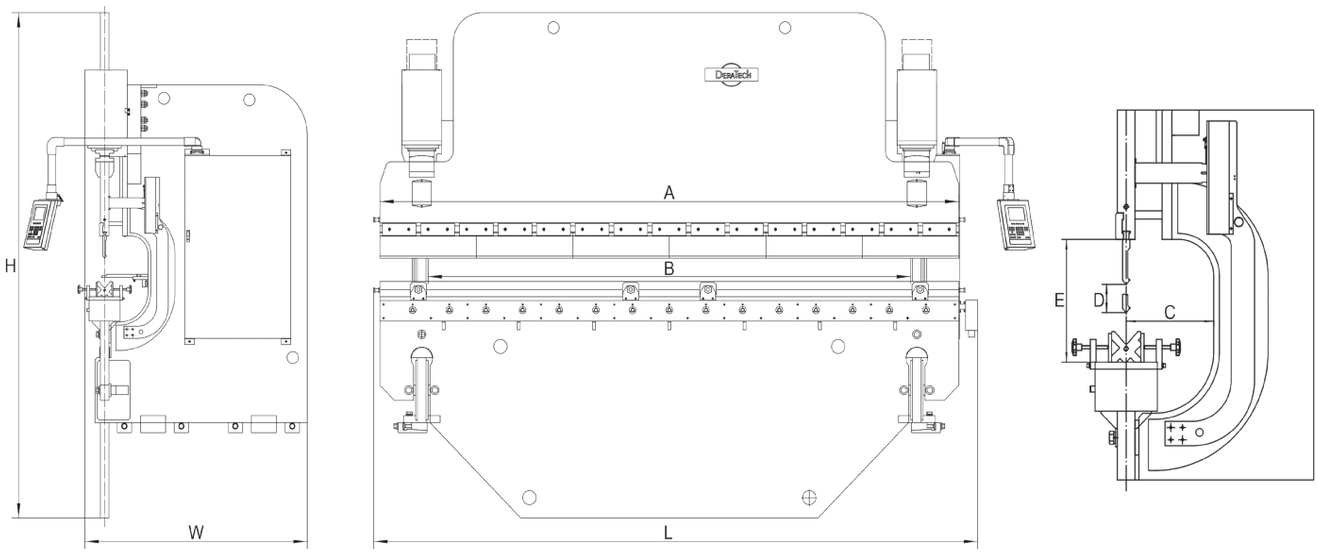

PARAMETERS - HD UBB

		A	B	C	D	E							L	W	H	
Model	Force (kN)	Max. bending length (mm)	Distance between uprights (mm)	Throat depth (mm)	Cylinder stroke (mm)	Opening height (mm)	Oil (L)	Main power (kW)	X-axis stroke (mm)	Max Speed (mm/s)			Dimensions (mm)			Weight (kg)
										Approaching speed	Working speed	Returning	Length	Width	Height	
UBB-400/3200D	4000	3200	2600	450	300	600	2×120	2×7.9	1000	110	0-8	110	3460	2350	3600	25700
UBB-400/4000D	4000	4000	3200	450	300	600	2×120	2×7.9	1000	110	0-8	110	4260	2350	3600	28500
UBB-400/5000D	4000	5000	4000	450	300	600	2×120	2×7.9	1000	100	0-8	100	5260	2350	4700	34700
UBB-400/6000D	4000	6000	5000	450	300	600	2×120	2×7.9	1000	100	0-8	100	6260	2350	5000	40000
UBB-400/7000D	4000	7000	6000	450	300	600	2×120	2×7.9	1000	100	0-8	100	7260	2350	5500	46000
UBB-400/8000D	4000	8000	7000	450	300	600	2×120	2×7.9	1000	100	0-8	100	8260	2350	5900	54000
UBB-500/3200D	5000	3200	2600	500	300	600	2×150	2×10.5	1000	90	0-7	90	3480	2580	4600	33000
UBB-500/4000D	5000	4000	3200	500	300	600	2×180	2×10.5	1000	90	0-7	90	4260	2580	4700	37000
UBB-500/5000D	5000	5000	4000	500	300	600	2×180	2×10.5	1000	90	0-7	90	5260	2580	4900	42000
UBB-500/6000D	5000	6000	5000	500	300	600	2×180	2×10.5	1000	90	0-7	90	6260	2580	5200	47000
UBB-500/7000D	5000	7000	6000	500	300	600	2×180	2×10.5	1000	90	0-7	90	7260	2580	5500	55000
UBB-500/8000D	5000	8000	7000	500	300	600	2×180	2×10.5	1000	90	0-7	90	8260	2580	5900	62000
UBB-600/4000D	6000	4000	3200	550	300	600	2×180	2×15.7	1000	90	0-7	90	4260	3530	4950	44000
UBB-600/5000D	6000	5000	4000	550	300	600	2×180	2×15.7	1000	90	0-7	90	5260	3530	5050	50000
UBB-600/6000D	6000	6000	5000	550	300	600	2×180	2×15.7	1000	90	0-7	90	6260	3530	5200	57000
UBB-600/7000D	6000	7000	6000	600	350	700	2×180	2×15.7	1000	90	0-7	90	7260	3530	5600	68000
UBB-600/8000D	6000	8000	7000	600	350	700	2×180	2×15.7	1000	90	0-7	90	8260	3530	6000	76000
UBB-700/4000D	7000	4000	3200	650	350	700	2×180	2×15.7	1000	90	0-7	90	4260	3600	5300	52000
UBB-700/5000D	7000	5000	4000	650	350	700	2×180	2×15.7	1000	90	0-7	90	5260	3600	5500	58000
UBB-700/6000D	7000	6000	5000	650	350	700	2×180	2×15.7	1000	90	0-7	90	6260	3600	5700	65000
UBB-700/7000D	7000	7000	6000	650	350	700	2×180	2×15.7	1000	90	0-7	90	7260	3600	5900	73000
UBB-700/8000D	7000	8000	7000	650	350	700	2×180	2×15.7	1000	90	0-7	90	8260	3600	6200	81000
UBB-800/4000D	8000	4000	3200	700	400	800	2×220	2×19.3	1000	90	0-7	90	4260	3650	5700	67000
UBB-800/5000D	8000	5000	4000	700	400	800	2×220	2×19.3	1000	90	0-7	90	5260	3650	5900	71000
UBB-800/6000D	8000	6000	5000	700	400	800	2×220	2×19.3	1000	90	0-7	90	6260	3650	6000	79000
UBB-800/7000D	8000	7000	6000	700	400	800	2×220	2×19.3	1000	90	0-7	90	7260	3650	6200	87000
UBB-800/8000D	8000	8000	7000	700	400	800	2×220	2×19.3	1000	90	0-7	90	8260	3650	6600	97000
UBB-1000/5000D	10000	5000	4000	800	400	950	2×420	2×24.1	1000	70	0-7	70	5350	4100	6300	99000
UBB-1000/6000D	10000	6000	5000	800	400	950	2×420	2×24.1	1000	70	0-7	70	6350	4100	6400	108000
UBB-1000/7000D	10000	7000	6000	800	400	950	2×420	2×24.1	1000	70	0-7	70	7350	4100	6600	119000
UBB-1000/8000D	10000	8000	7000	800	400	950	2×420	2×24.1	1000	70	0-7	70	8350	4100	6800	130000
UBB-1000/10000D	10000	10000	9000	800	400	950	2×420	2×24.1	1000	70	0-7	70	10350	4100	7600	157000
UBB-1000/12000D	10000	12000	10000	800	400	950	2×420	2×24.1	1000	70	0-7	70	12350	4100	8500	184000
UBB-1200/5000D	12000	5000	4000	1000	400	1000	2×420	2×24.1	1000	60	0-6	60	5350	4200	6400	114000
UBB-1200/6000D	12000	6000	5000	1000	400	1000	2×420	2×24.1	1000	60	0-6	60	6350	4200	6600	124000
UBB-1200/7000D	12000	7000	6000	1000	400	1000	2×420	2×24.1	1000	60	0-6	60	7350	4200	6800	135000
UBB-1200/8000D	12000	8000	7000	1000	400	1000	2×420	2×24.1	1000	60	0-6	60	8350	4200	7000	148000
UBB-1200/10000D	12000	10000	9000	1000	400	1000	2×420	2×24.1	1000	60	0-6	60	10350	4200	7900	178000
UBB-1200/12000D	12000	12000	10000	1000	400	1000	2×420	2×24.1	1000	60	0-6	60	12350	4200	8800	210000

Optional CNC System

Italy ESA S640

- 15" resistive touch screen (resolution 1366 x 768)
- Memory capacity 128MB, 2D graphics as standard
- 4+1 axes as standard, 6+1 axes optional
- Automatic bending sequence calculation as standard
- Offline software support (optional)

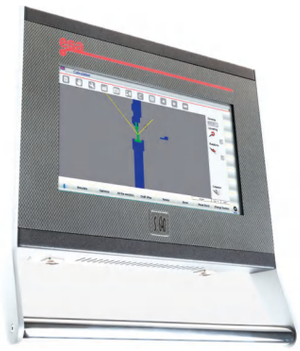

Italy ESA S860W

- Multi-touch support, 18.5 inches
- Support for "hand-drawn" parts
- Support direct import and management of mold libraries (dxf file format)
- Support for upper tooling clamp and lower tooling holder library management
- Support for DataM laser angle measurement
- Support for Esa 3D Bend 3-D bending software
- Modbus TCP bus interface for Industry 4.0

Switzerland Cybelec VT-15

- 15" touch screen, can be used with gloves
- Automatic simulated bending step sequence function
- Intuitive programming and easy-to-set-up navigation
- 2D finger-painting programming function (section drawing) and precise 2D program creation
- EasyBend for single part bending
- 4 axes as standard, control up to 6 axes
- Pressure, deflection compensation and pump control functions

Switzerland Cybelec VT-19

- 19" capacitive touch screen (resolution 1366 x 768)
- Windows operating system, 32GB storage capacity
- Standard 2D graphics, optional 3D graphics
- 4+1 axes as standard, unlimited axes available
- Automatic bending sequence calculation as standard
- Support offline software (optional)

TAM-S
Hydraulic CNC Press Brake

Cost-effective, low failure rate, stable and reliable, best-selling in the market all year round.

PRODUCT FEATURES

Quick Clamping Device

Easy tooling change and improved productivity.

Stable Backgauge Structure

Double linear guide structure to ensure the best positioning accuracy. Multi-stage stop design to increase the positioning range.

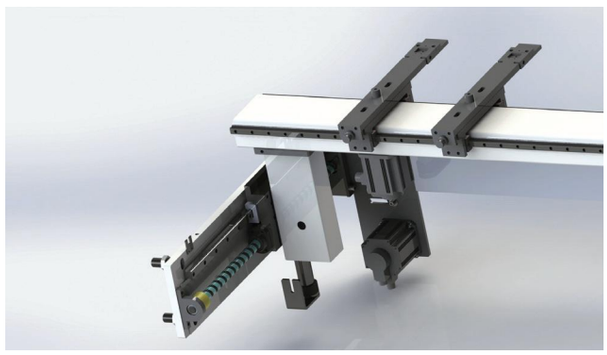

Compensation Device of Throat Deformation

Can accurately measure the amount of deformation and feedback, to ensure accuracy, and can effectively prevent non-standard workpiece collision interference detection unit.

Mechanical Compensation Device

Controlled by CNC system to ensure the bending accuracy is always stable.

Removable Front Pallet

The pallet can follow the linear guide to move and can be stopped at any position.

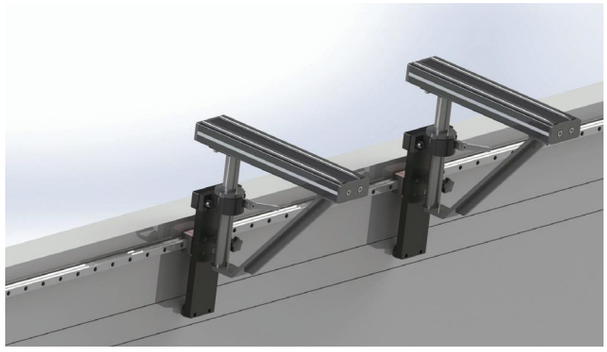

Tooling

Integral hardened for durability.

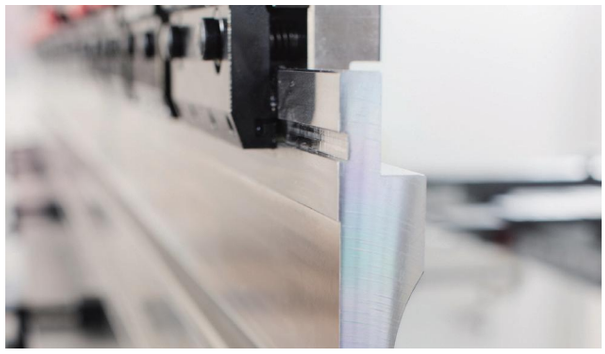

Hydraulic System

Imported from Germany, higher frequency response, lower failure rate, and smoother machine operation.

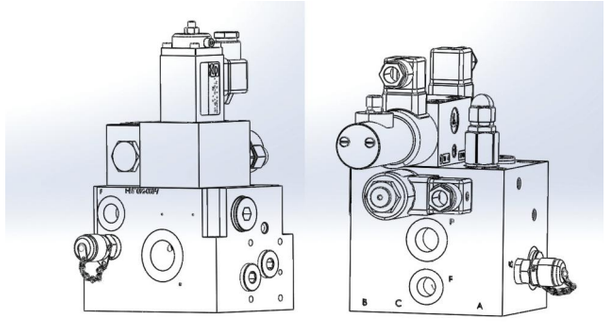

Fuel Storage Tank Made of Special Material

The ability to maintain extremely high cylinder cleanliness ensures the stable operation of the hydraulic oil path. According to the industry experience, more than 85% of the aftermarket of CNC press brakes are related to the cleanliness within the hydraulic oil channel, so the probability of failure can be reduced from the source.

CNC System

Switzerland Cybelec CT12

- 12" touch screen
- "EasyBend" page operation single action
- Interactive pop-up alarm box
- Automatic calculation of bending angle, main pressure and deflection compensation
- Automatic calculation of bending steps
- Multi-step bending sequence, product angle, pressure and compensation control can be stored
- Finger drawing of workp/iece cross-sections

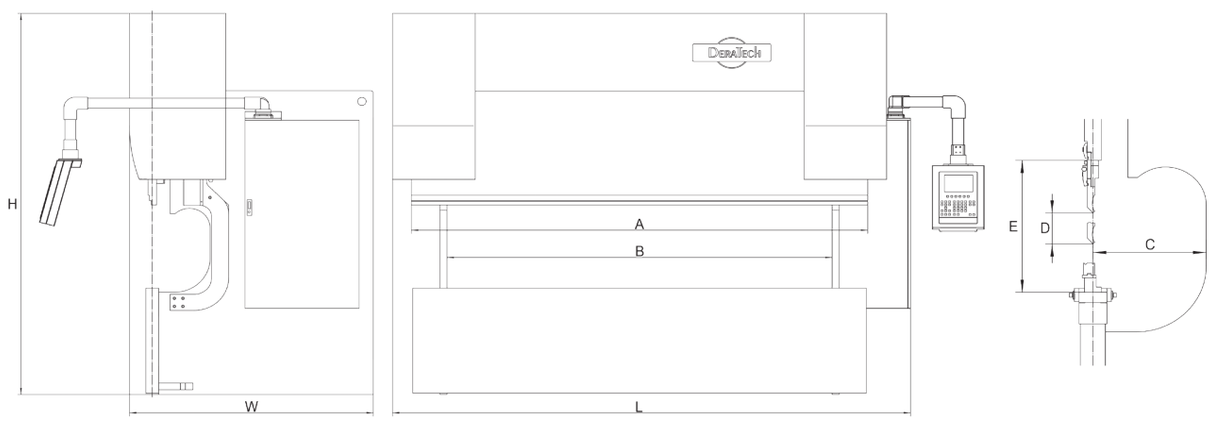

PARAMETERS - TAM-S

		A	B	C	D	E							L	W	H	
Model	Force (kN)	Max. bending length (mm)	Distance between uprights (mm)	Throat depth (mm)	Cylinder stroke (mm)	Opening height (mm)	Main power (kW)	X-axis stroke (mm)	R-axis stroke (mm)	Max Speed (mm/s)			Dimensions (mm)			Weight (kg)
										Approaching speed	Working speed	Returning	Length	Width	Height	
TAM-80/2500S	800	2500	2000	300	160	425	7.9	450	200	200	0-15	200	2990	1470	2410	6100
TAM-100/3200S	1000	3200	2700	400	200	475	10.5	450	200	220	0-15	180	3700	1550	2645	7800
TAM-110/2500S	1100	2500	2000	400	225	500	10.5	600	200	220	0-15	180	3010	1670	2720	7800
TAM-110/3200S	1100	3200	2700	400	225	500	10.5	600	200	220	0-15	180	3710	1670	2720	9000
TAM-110/4100S	1100	4100	3600	500	225	500	10.5	600	200	220	0-15	180	4610	1770	2720	10900
TAM-130/2500S	1300	2500	2000	400	225	500	10.5	600	200	200	0-15	160	3010	1670	2720	7800
TAM-130/3200S	1300	3200	2700	400	225	500	10.5	600	200	200	0-15	160	3710	1670	2720	9000
TAM-130/4100S	1300	4100	3600	500	225	500	10.5	600	200	200	0-15	160	4610	1770	2720	11300
TAM-130/5100S	1300	5100	4600	400	225	500	15.7	600	200	180	0-15	130	5610	1820	2960	15200
TAM-130/6100S	1300	6100	5600	400	225	500	15.7	600	200	180	0-15	130	6610	1820	3110	17700
TAM-160/3200S	1600	3200	2700	400	200	475	15.7	600	200	200	0-15	160	3720	1700	2685	9800
TAM-160/4100S	1600	4100	3600	500	200	475	15.7	600	200	200	0-15	160	4620	1700	2685	11500
TAM-170/2500S	1700	2500	2000	400	225	500	15.7	600	200	200	0-15	160	3030	1680	2720	8700
TAM-170/3200S	1700	3200	2700	400	225	500	15.7	600	200	200	0-15	160	3730	1680	2720	10100
TAM-170/4100S	1700	4100	3600	500	225	500	15.7	600	200	200	0-15	160	4630	1790	2720	12100
TAM-170/5100S	1700	5100	4600	400	225	500	15.7	600	200	160	0-15	110	5630	1800	2960	17000
TAM-170/6100S	1700	6100	5600	400	225	500	15.7	600	200	160	0-15	110	6630	1800	3160	20000
TAM-230/2500S	2300	2500	2000	420	225	500	19.3	600	200	140	0-13	150	3040	1700	2720	10500
TAM-230/3200S	2300	3200	2700	420	225	500	19.3	600	200	140	0-13	150	3750	1700	2720	11800
TAM-230/4100S	2300	4100	3600	420	225	500	19.3	600	200	140	0-13	150	4650	1700	2720	13700
TAM-230/5100S	2300	5100	4600	420	225	500	19.3	600	200	130	0-13	130	5640	1880	3060	18600
TAM-230/6100S	2300	6100	5600	420	225	500	19.3	600	200	130	0-13	130	6640	1880	3210	21600
TAM-250/2500S	2500	2500	2000	400	250	525	19.3	600	200	130	0-13	130	3050	1920	2975	11700
TAM-250/3200S	2500	3200	2700	400	250	525	19.3	600	200	130	0-13	130	3750	1920	2975	14000
TAM-250/4100S	2500	4100	3600	400	250	525	19.3	600	200	130	0-13	130	4650	1920	2975	16000
TAM-250/5100S	2500	5100	4600	400	250	525	19.3	600	200	120	0-13	110	5650	1920	3125	21200
TAM-250/6100S	2500	6100	5600	400	250	525	19.3	600	200	120	0-13	110	6650	1920	3325	24600
TAM-320/3200S	3200	3200	2700	400	300	575	24.1	600	200	100	0-13	110	3930	2110	3205	17700
TAM-320/4100S	3200	4100	3600	400	300	575	24.1	600	200	100	0-13	110	4830	2110	3205	20300
TAM-320/5100S	3200	5100	4600	400	300	575	24.1	600	200	90	0-13	90	5830	2150	3690	26100
TAM-320/6100S	3200	6100	5600	400	300	575	24.1	600	200	90	0-13	90	6830	2150	3855	30400

OPTIONAL CONFIGURATION

Italy Laser Protection Light Curtain

MSD light curtain protection device can effectively provide bending machine safety, to protect the operator's personal safety.

Sheet Thickness Measuring Device

Device on the backgauge finger, the device can measure the plate thickness accuracy of +/- 0.01mm, can detect the material thickness of 20mm and below. The whole inspection process takes only 0.1 seconds, and the inspection value is instantly fed back to the CNC system and helps the system adjust to the real plate thickness.

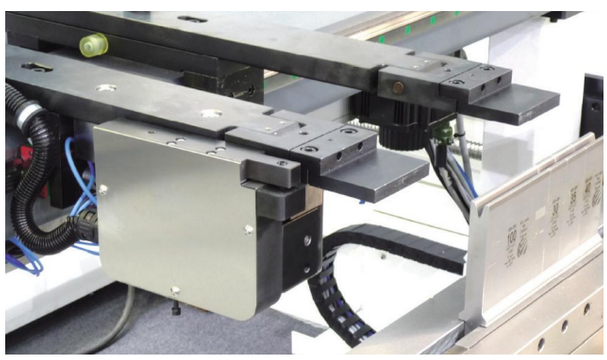

Angle Monitoring and Correction Device

Online real-time monitoring of the bending angle, to provide immediate feedback to the CNC system, so that the accuracy measurement and precision of the bending angle can reach +/- 0.1 °, to ensure the consistency of each batch of workpiece bending accuracy.

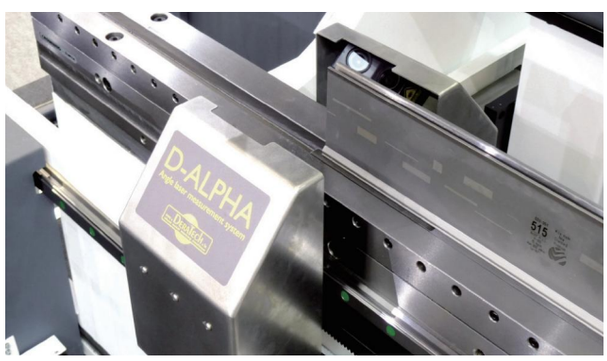

X-R-Z1-Z2 4 Axes Backgauge System

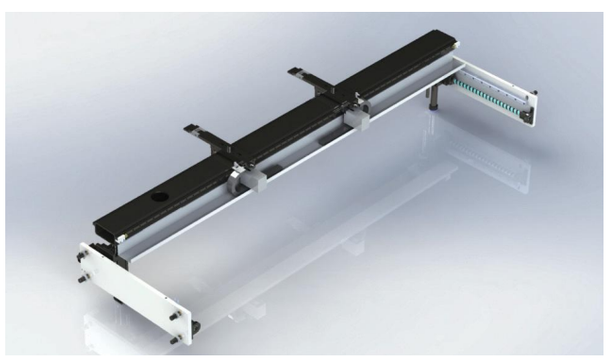

X-R-Z1-Z2-X' 5 Axes Backgauge System

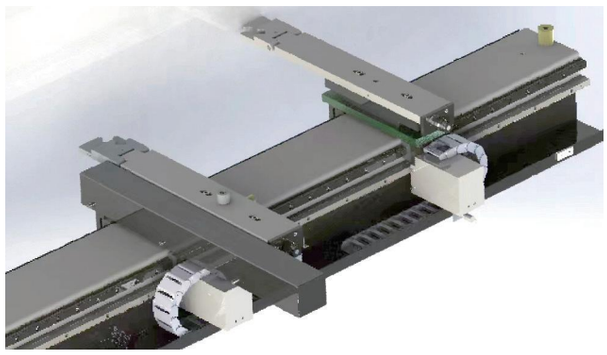

X1-X2-R1-R2-Z1-Z2 6 Axes Backgauge System

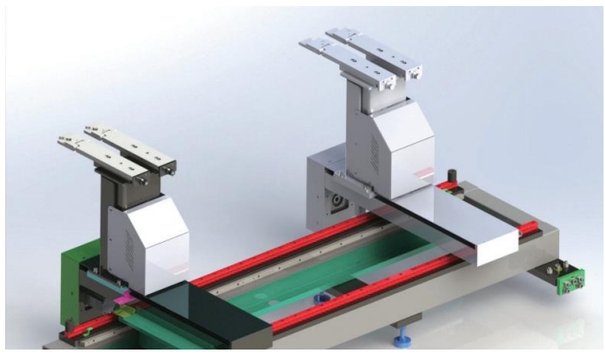

Servo Replacement of Tooling Slots
Need to add axes to use the function

Easily complete complex processes such as small-angle bending, press-flat bending, and double-thickness compound bending Precise positioning at any position within the stroke range, reducing tooling change time and maximizing tooling change efficiency.

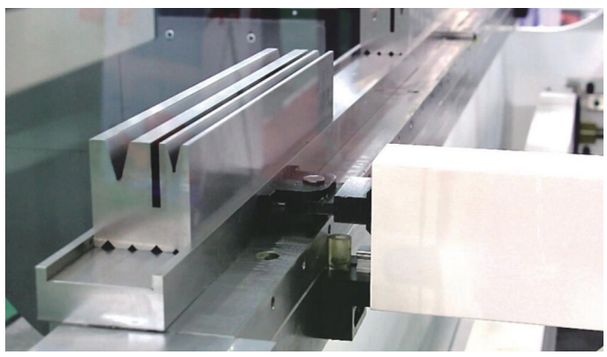

Bending Aids System

Improves bending efficiency and saves labor for the operator.

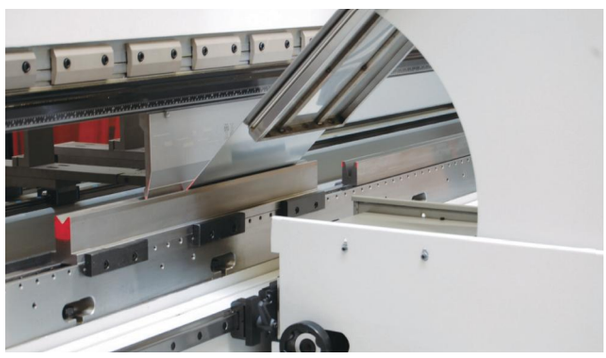

Pneumatic Lifting Pallet

Designed for complex folding process (bending and hemming bending) workpiece design of pneumatic lift front support, according to the working position of a tooling set holds the material plane, make your bending more convenient and quick.

Pneumatic Rear Pallet Device

Specially designed for complex processes (e.g. bending + flattening bending) workpieces with pneumatic lifting front pallets, which can set the palletizing plane according to the working position of the tooling.

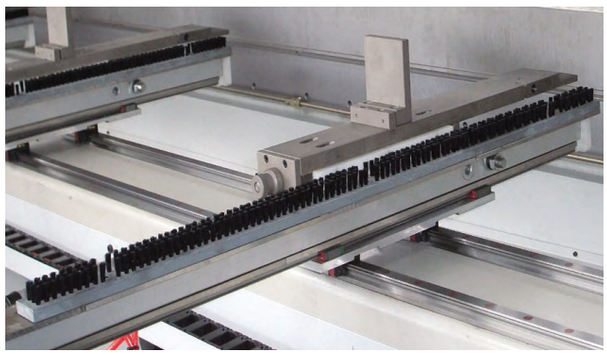

OPTIONAL CNC SYSTEM

Italy ESA S640

- 15" resistive touch screen (resolution 1366 x 768)
- Memory capacity 128MB, 2D graphics as standard
- 4+1 axes as standard, 6+1 axes optional
- Automatic bending sequence calculation as standard
- Offline software support (optional)

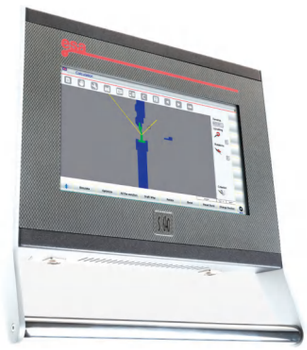

Italy ESA S860W

- Multi-touch support, 18.5 inches
- Support for "hand-drawn" parts
- Support direct import and management of mold libraries (dxf file format)
- Support for upper tooling clamp and lower tooling holder library management
- Support for DataM laser angle measurement
- Support for Esa 3D Bend 3-D bending software
- Modbus TCP bus interface for Industry 4.0

Switzerland Cybelec VT-15

- 15" touch screen, can be used with gloves
- Automatic simulated bending step sequence function
- Intuitive programming and easy-to-set-up navigation
- 2D finger-painting programming function (section drawing) and precise 2D program creation
- EasyBend for single part bending
- 4 axes as standard, control up to 6 axes
- Pressure, deflection compensation and pump control functions

Switzerland Cybelec VT-19

- 19" capacitive touch screen (resolution 1366 x 768)
- Windows operating system, 32GB storage capacity
- Standard 2D graphics, optional 3D graphics
- 4+1 axes as standard, unlimited axes available
- Automatic bending sequence calculation as standard
- Support offline software (optional)

Netherlands Delem DA-66T

- 17" infrared touch screen
- Windows CE operating system with 1GB storage capacity
- Standard 2D graphics, 3D display, optional 3D graphics programming
- Automatic bending sequence calculation as standard
- Offline software as standard

BCI
Suction Cup Bending Center

Full servo drive, easy system operation, high efficiency with both performance and price.

PRODUCT FEATURES

Scientific Structural Design

The core frame of the equipment is made of high grade QT500-7 and HT250 or above castings, which is stable and durable.

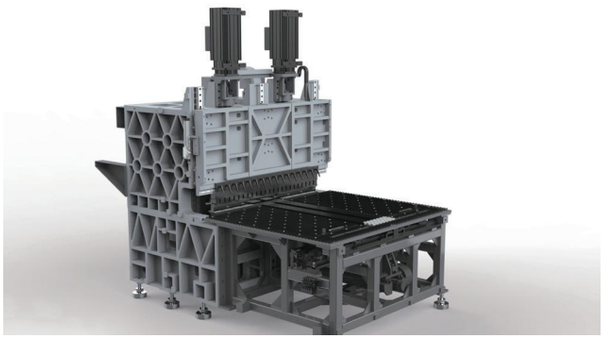

Precision Drive Mechanism

The core movement mechanism of the whole machine adopts heavy-duty type grinding screw, the maximum screw reaches 8020, with heavy-duty type high-precision P3 roller type linear guide, the transmission rigidity is sufficient, high precision.

Quick-Release Tools

Equipped with precision bending knife and press knife, the whole tool is hardened, the surface hardness is over HRC55, and it is easy to disassemble.

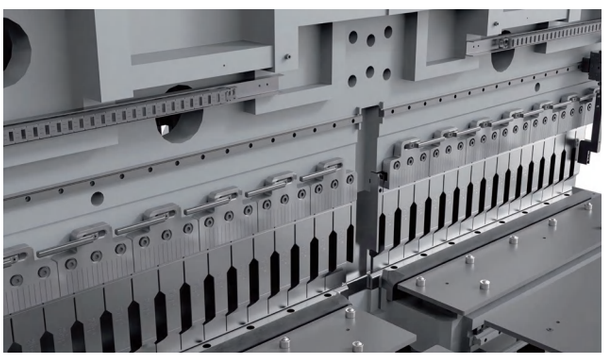

Precise Positioning System

The loading adopts Y-axis and three-reliance positioning method, with suction cups to fix the workpiece, suitable for thin plate processing.

Sheet Thickness Measuring Device

The thickness of the bending plate is tested before each bending, and the workpiece is identified automatically. Avoid equipment damage.

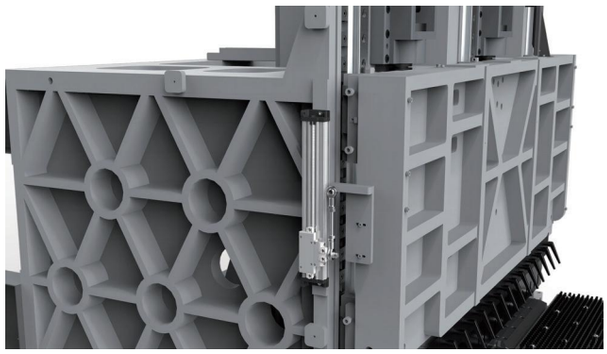

PARAMETERS - BCI

Model	Fastest Speed (sec/ knife)	Max. bending size Inch (mm)	Double-sided molding Min size (mm)	Four-sided molding Min.size (mm)	Max. bending Height (without hinge knife) (mm)	Max. bending thickness				Material Min. Thickness (mm)	Bending Angle (°)	Peak Power (kW)	Avg. power (kW)	Servo Number of axes (PCS)	Dimension (mm)	Weight (ton)
						Carbon Steel Sheet (UTS 410 N/ mm^2)	304 Stainless steel (UTS 520 N/mm^2)	201 Stainless (UTS 515 N/mm^2)	Aluminum sheet (UTS 265 N/mm^2)							
BCI-1000S	0.2	1000×1000	140	140×210	170	1.2	1.0	0.8	1.6	0.35	±130	25	1.1	9	2840×1490×2810	7
BCI-1000SC	0.2	1000×1000	140	140×210	170	1.2	1.0	0.8	1.6	0.35	±130	27	1.2	11	2840×1490×2810	7
BCI-1400S	0.2	1400×1400	140	140×210	170	1.2	1.0	0.8	1.6	0.35	±130	34	1.5	9	3660×1910×2900	10
BCI-1400SC	0.2	1400×1400	140	140×210	170	1.2	1.0	0.8	1.6	0.35	±130	36	1.6	11	3660×1910×2900	10
Remarks: Bending height support customization																

BCI
Press Arm Bending Center

Ergonomic design, industry-leading control technology, energy saving and environmental protection, stable and efficient, wide processing range.

PRODUCT FEATURES

Omni-Directional Workpiece Positioning System

High-torque servo motor with pressure arm clamping workpiece, workpiece rotation adopts high-precision RV reducer, higher precision of rotation positioning. Shaped workpieces such as mesh hole, hollowing and thick plate are applicable, stable operation and high reliability.

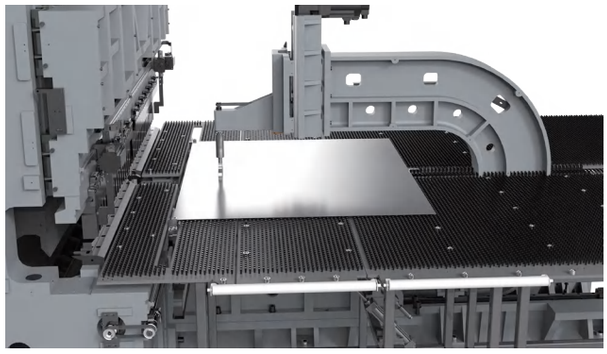

Power Hinge Knife (Optional)

Effectively avoid interference and scratching by the workpiece surface.

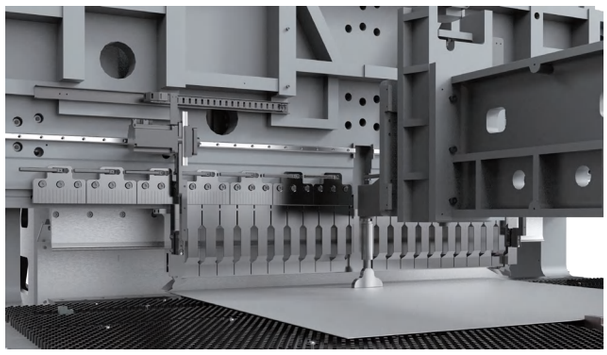

PARAMETERS - BCI

Model	Fastest Speed (s/ knife)	Max. bending size Inch (mm)	Double-sided molding Min size (mm)	Four-sided molding Min.size (mm)	Max. bending Height (without hinge knife) (mm)	Max. bending thickness				Material Min. Thickness (mm)	Bending Angle (°)	Peak Power (kW)	Avg. power (kW)	Servo Number of axes (PCS)	Dimension (mm)	Weight (ton)
						Carbon Steel Sheet (UTS 410 N/mm^2)	304 Stainless steel (UTS 520 N/mm^2)	201 Stainless Steel (UTS 515 N/mm^2)	Aluminum sheet (UTS 265 N/mm^2)							
BCI-1400P	0.2	1400×1400	140	140×190	170	1.5	1.2	1.0	2.0	0.35	±130	38	1.8	13	4400×1910×2900	12
BCI-1400PC	0.2	1400×1400	140	140×190	170	2.0	1.5	1.2	3.0	0.35	±130	40	1.9	15	4400×1910×2900	12
BCI-2000P	0.2	2000×1250	140	140×190	170	1.5	1.2	1.0	2.0	0.35	±130	77	2.5	13	5150×2700×3350	16
BCI-2000PC	0.2	2000×1250	140	140×190	170	2.0	1.5	1.2	3.0	0.35	±130	79	2.6	15	5150×2700×3350	16
BCI-2000PS	0.2	2000×1250	140	140×190	170	3.0	2.0	1.7	4.0	0.35	±130	168	5.4	18	5150×2700×3350	16
BCI-2000A	0.2	2000×1250	140	140×190	170	1.5	1.2	1.0	2.0	0.35	±130	82	2.9	21	5150×2700×3350	16
BCI-2500P	0.2	2500×1500	140	140×190	170	1.5	1.2	0.8	2.0	0.35	±130	77	2.8	13	5750×3150×3410	19
BCI-2500PC	0.2	2500×1500	140	140×190	170	2.0	1.5	1.2	3.0	0.35	±130	79	2.9	15	5750×3150×3410	19
BCI-2500PS	0.2	2500×1500	140	140×190	170	3.0	2.0	1.7	4.0	0.35	±130	168	5.8	18	5750×3150×3410	19
BCI-2500A	0.2	2500×1500	140	140×190	170	1.5	1.2	1.0	2.0	0.35	±130	82	3.0	21	5750×3150×3410	19
BCI-3200PS	0.2	3200×1500	180	180×230	170	2.0	1.5	1.2	3.0	0.35	±130	103	3.2	18	6600×3900×3300	26

Remarks: Bending height support customization

CNC System

DH-21B System

- 21" display
- Graphical visual error checking programming
- Cloud-based interface management system
- Offline programming support
- Advanced autonomous programming
- Off-load detection
- Plate thickness detection
- Soft limit function to prevent bending knife collision
- No board mode, no physical demonstration of the test process
- Real-time step sequences can be viewed
- Multiple Industry 4.0 interfaces

RBC
Mobile Robotic Bending Cell

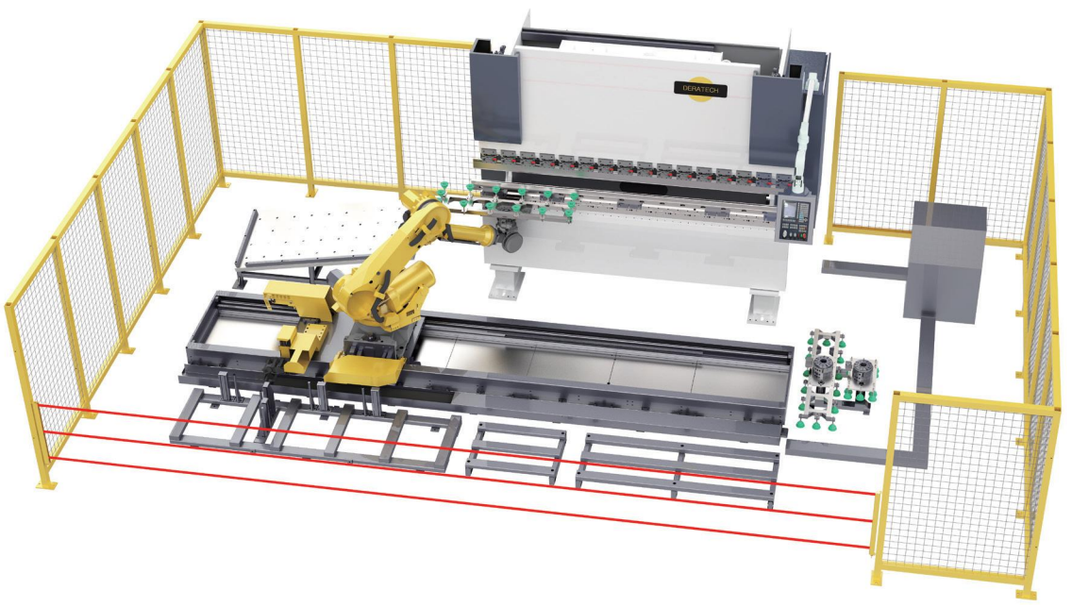

The mobile robot bending cell combines CNC press brake and robot through PLC motion control system, which can achieve automatic gripping, centering, bending and palletizing of sheet material, effectively reducing the labor intensity of manual operation and significantly improving cost. This effectively reduces the labor intensity of manual operation and significantly improves production efficiency and saves costs. The bending cell solution can be customized according to the customer's workpiece to maximize customer satisfaction.

RBC
Stationary Robotic Bending Cell

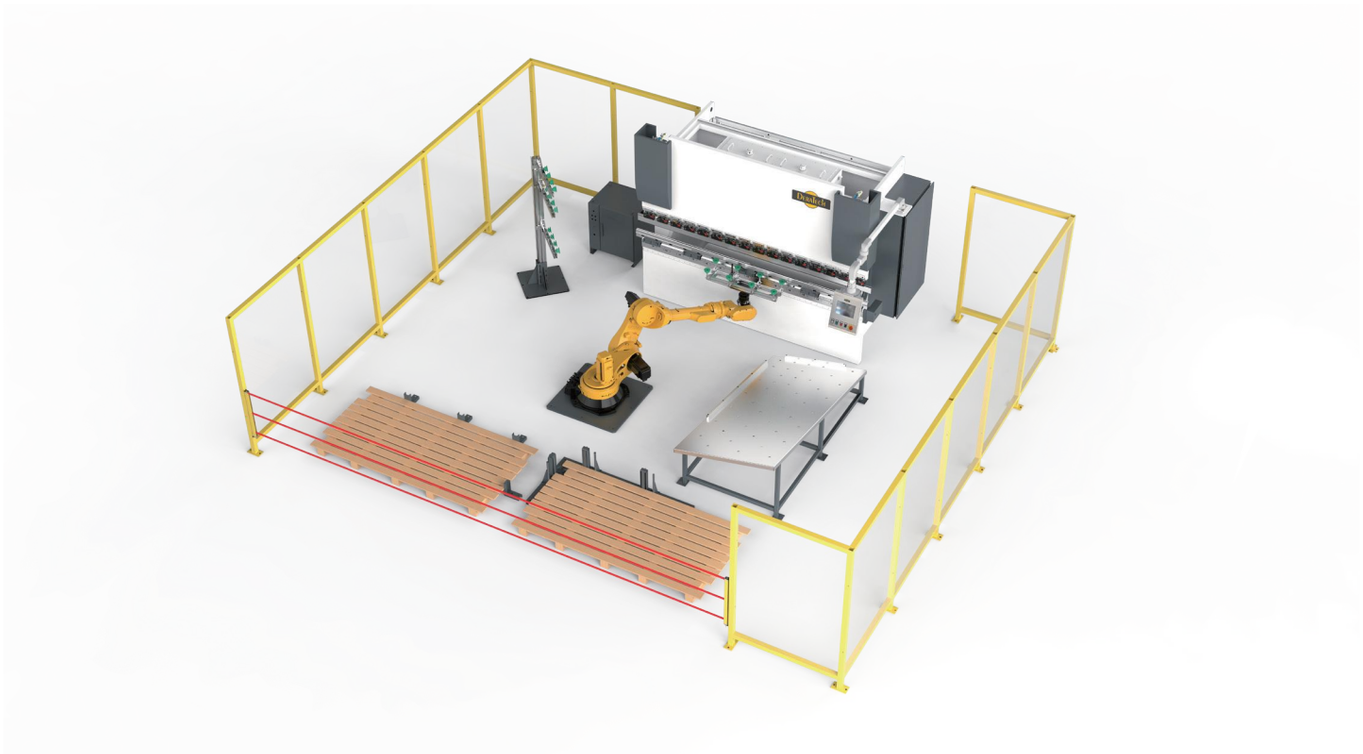

Through multi-joint industrial robots and CNC press brakes working together, automatic gripping, centering, bending and palletizing of sheet materials are realized to achieve automatic bending. The press brake and robot can be selected according to the weight, size and size of the workpiece and the bending process, and the related auxiliary devices can be designed to fulfill the customized requirements.

FMS
Sheet Bending Flexible Machining System

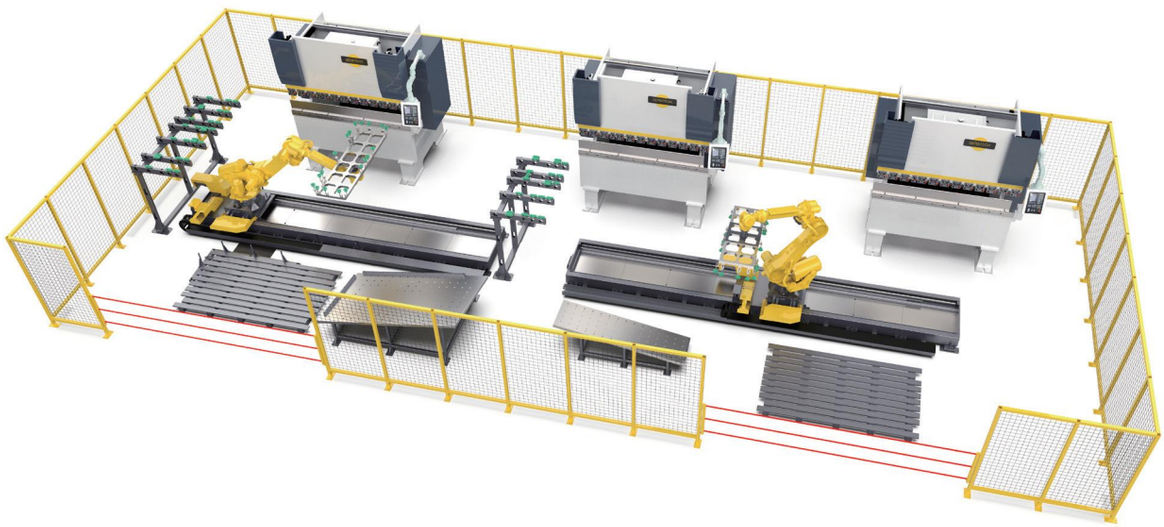

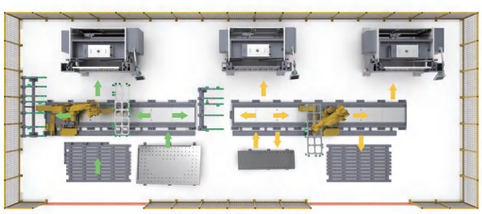

By multiple CNC press brakes, robots cooperate with each other to realize the automatic bending of complex products, complete the entire product bending work in one time, reduce transit links, improve production efficiency, save production space, and achieve automated production.

PARAMETERS - Fixed Robotic Press Brake Unit							
Unit specification	Max. weight of sheet	Sheet range	Robot Model	Brand	Robot rated load	Robot arm span	Running axis
RBC-25F	10KG	800×600	M-20iD/25	FANUC	25KG	1831mm	NO
RBC-70F	30KG	2000×1000	M-710iC/70	FANUC	70KG	2050mm	NO
RBC-80F	40KG	2500×1250	ER80-2565-BD	ESTUN	80KG	2565mm	NO
RBC-130F	65KG	3000×1500	ER130-2865-BD	ESTUN	130KG	2865mm	NO

PARAMETERS - Mobile Robotic Press Brake Unit							
Unit specification	Max. weight of sheet	Sheet range	Robot Model	Brand	Robot rated load	Robot arm span	Running axis length
RBC-12M	5KG	500×500	M-10iD/12	FANUC	12KG	1441mm	2m
RBC-25M	10KG	1000×800	M-20iD/25	FANUC	25KG	1831mm	4m
RBC-80M	40KG	2500×1250	ER80-2565-BD	ESTUN	80KG	2565mm	6m
RBC-165M	80KG	3000×1500	R-2000iC/165F	FANUC	165KG	2655mm	6m
RBC-210M	110KG	3000×1500	R-2000iC/210F	FANUC	210KG	2655mm	6m
RBC-270M	130KG	3500×1500	R-2000iC/270F	FANUC	270KG	2655mm	6m

OPTIONAL CONFIGURATION

Quick Change Device

The robot can automatically change grippers of different sizes through the quick-change device. change.

Center Console

The central console uses a touch screen to control the operation of the entire robot bending cell, set the production quantity, adjust the running speed, etc. The central console allows real-time monitoring of operating conditions: product count, running time, signal status, etc.

Visual Identity System

The production program is automatically selected to be called according to the material, and the consistency of the board is checked, as well as potential problems such as the correct direction of board placement and front and back sides.

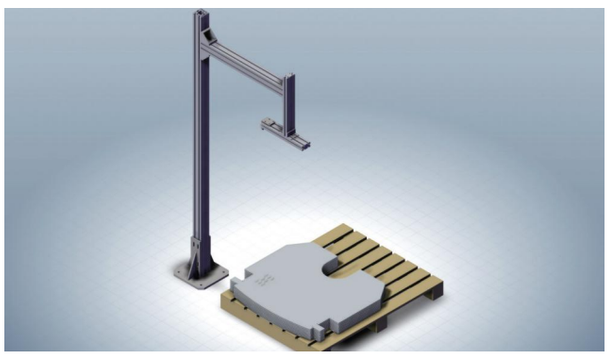

Sheet Quantity Detection Device

Adopting non-contact sensors, the system is directly controlled and automatically alarms and pauses operation if there is an overlap of board material.

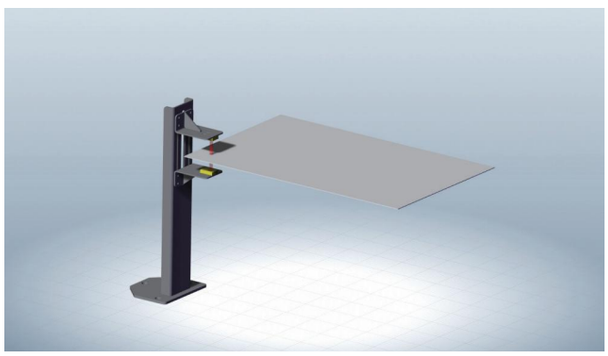

Offline Simulation Programming Software

Fully automatic gripping of parts and calculation of paths, gripping and simultaneous graphical feedback, and manual adjustment of paths at control points to ensure stable work and smooth production of robots and press brakes.

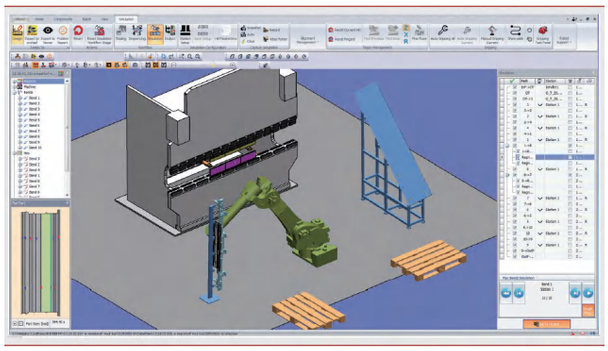

Calculation of bending pressure tonnage:

Experience calculation formula (applicable to Q235):

P = 650×t×t×L/1000V

T—workpiece sheet thickness(mm)

L—workpiece sheet width(mm)

V—the width of the lower tooling slot (mm)

Unit conversion: (10N≈1kg, 10kN≈1t)

Calculation of flattening bending pressure: Bending carbon steel plate, the length of 1000mm when the pressure

Bending shape	Open bending 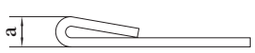		Flattened bending edge 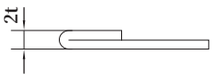	
Plate thickness (mm)	Pressure (TON)	a (mm)	Pressure (TON)	2t (mm)
0.6	17	1.5	26	1.2
0.8	21	2.0	32	1.6
1.0	26	2.5	40	2.0
1.2	30	3.0	50	2.4
1.6	38	4.0	63	3.2
2.0	43	5.0	80	4.0
2.3	50	5.8	90	4.6
3.2	60	8.0	120	6.4

Sheet Bending Force Chart

Lower tooling V-slot dimension	Bending radius	Minimum Side length	t	0.5~2.6			3.8~8.0			9.0~10			12 above											
			V	6t			8t			10t			12t												
V	r	L	0.5	0.6	0.8	1.0	1.2	1.4	1.6	2.0	2.3	2.6	3.0	3.2	3.6	4.5	5.0	6.0	9.0	12	16	19	22	25	30
4	0.7	2.8	4	6																					
6	1.0	4.0	3	4	7	11																			
7	1.1	5.0		3	6	10	14																		
8	1.3	5.5		3	5	10	12	15																	
10	1.5	7.0			4	7	10	13	17																
12	2.0	8.5				6	8	11	11	22															
14	2.3	10					7	10	13	19	25														
16	2.5	11					7	9	11	17	22	28													
18	3.0	13.5						8	10	15	19	25	37												
20	3.3	14							9	13	17	22	30	37											
25	4.0	18								11	14	18	24	27	37										
32	5.5	23									11	14	19	21	27	44									
40	6.5	28										11	15	17	21	34	42								
50	8	35											11	14	17	27	33	48							
63	10	45													14	21	26	38							
80	13.5	57															21	30	66						
100	16	71																24	54	96					
125	20	89																	43	76	139				
160	26	113																		60	106	150			
200	35	140																			85	119	160		
250	42	175																				95	128	165	238

V : Lower tooling V-slot dimension
r : Bending radius
L : Minimum side length
t : Plate thickness

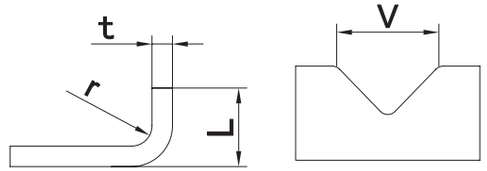

The data in the table is for free bending, bending length of 1000mm steel plate (Rm=450N/mm²)

1.When using the double V lower tooling, it is recommended to use the inner groove processing.
2.When using the tooling, please do not exceed the pressure-bearing value indicated.
3.Please replace the tooling in time if there is any damage such as crack, breakage or dent.
4.Please use the tooling products provided by domestic and foreign famous suppliers.

SUPERA
Fiber Laser Cutting Machine

SuperA series fiber laser cutting machine is a high-tech equipment integrating laser technology, CNC technology and precision machinery technology. It has a fiber laser with first-class electro-optical conversion efficiency, which can provide constant power and excellent beam quality, and is equipped with auto-focusing fiber cutting head and flexible and efficient exchange table to make the shape and quality of workpiece precise and stable, and improve production efficiency.

PRODUCT FEATURES

High-Strength Main Frame

Integral gantry structure, high strength steel plate welded bed, annealing stress relief treatment, rigid enough, small deformation. Cutting area configuration dust removal device: single channel middle dust removal design, the tail through the air duct directly to the dust removal equipment, air volume vortex does not exist loss; double-row cylinder multi-partition arrangement, through the CNC system control, so that dust removal time, segmentation, zoning arbitrary switch. The bottom of the bed is arranged with waste storage The bottom of the bed is arranged with waste storage box, centralized cleaning, convenient and quick.

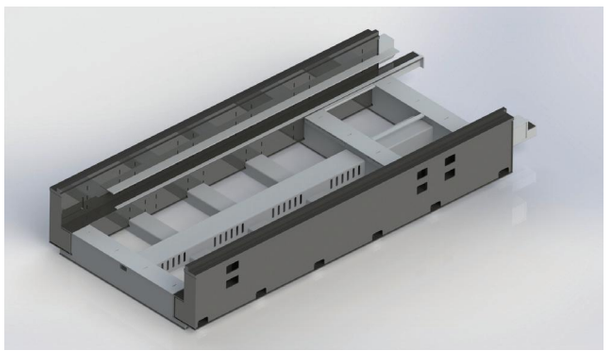

Aviation Level Special Formed Aluminum Beam

Adopting lightweight design concept and finite element optimization analysis, the dynamic performance is good. The beam base and Z-axis slide plate adopts high-strength cast aluminum integrated molding design, which is lightweight, compact, high-precision, and quick-response.

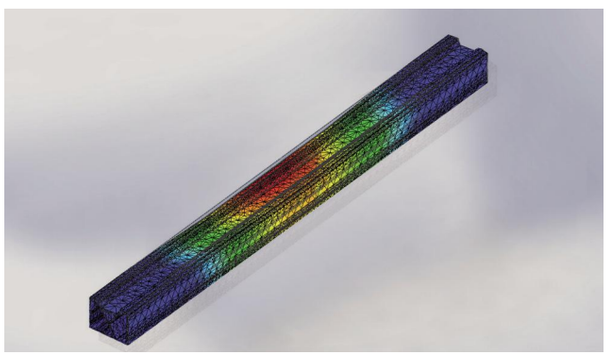

Laser Cutting Head

Equipped with German Precitec/Swiss RayTools automatic focusing cutting head, it can realize non-inductive perforation, smart cutting, high-speed leapfrogging, ultra-small taper cutting, high-gloss cutting, etc. High-power focusing, more efficient cooling, real-time early warning and monitoring, to ensure the stable and long-term operation of the machine.

Dual Temperature and Dual Control Water Cooling System

High-quality brand refrigeration components, real-time warning feedback, cooling more efficient. The dual-temperature dual-control design serves as a strong shield for the cooling and protection of the laser and cutting head, which more effectively prolongs the service life of the equipment.

Laser Source

It can be equipped withfiber lasers such as German IPG/ Chuangxin MAX, with higher modularity and integration, and superior processing performance. Continuous and stable output, high electro-optical conversion efficiency, low failure rate, more stable operation, and more convenient maintenance.

CNC System

Adopt FSCUT laser cutting machine special CNC system, powerful computing processing ability ensures higher stability, human-machine interactive interface makes operation more intelligent. Built-in high-efficiency automatic nesting module, together with the follower cutting head and embedded process database, realize a variety of laser-specific functions in all aspects.

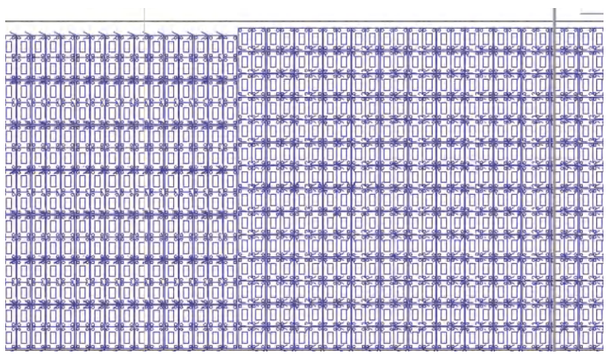

AC Servo Drive Unit

A full set of servo motors improve the speed and accuracy of the machine tool. Servo drives and motors are used in complete sets to give full play to the high-quality dynamic performance of the machine tool.

Exchange Table

Adopt FSCUT laser cutting machine special CNC system, powerful computing processing ability ensures higher stability, human-machine interactive interface makes operation more intelligent. Built-in high-efficiency automatic nesting module, together with the follower cutting head and embedded process database, realize a variety of laser-specific functions in all aspects.

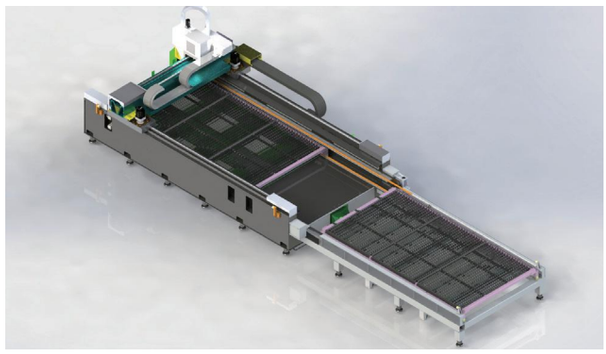

SAFETY CONTROL

Automatic Edge Finding Function

The laser cutting head has a modular integrated sensor that automatically detects the edge of the sheet. The onebutton operation is fast and convenient, without the need for personnel to participate in the adjustment, which improves the efficiency of the machine.

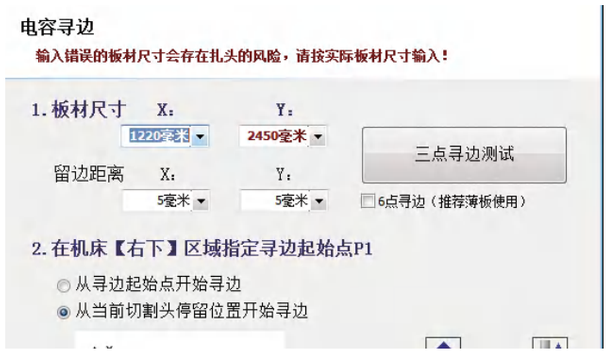

Cutting Auxiliary Gas Pressure Control

Real-time adjustment of cutting auxiliary gas pressure. A variety of auxiliary gas automatic switching function.

Air Cutting Function

Air compressors, cold compressors, and filters are required to make the air meet the cutting requirements and greatly reduce the cutting cost.

Laser Power Control

During the cutting process, it automatically detects changes in path, speed, etc., and controls the laser output power in real time to provide the best beam quality. Avoid overburning when cutting small contours or sharp corners, and achieve the best cutting effect.

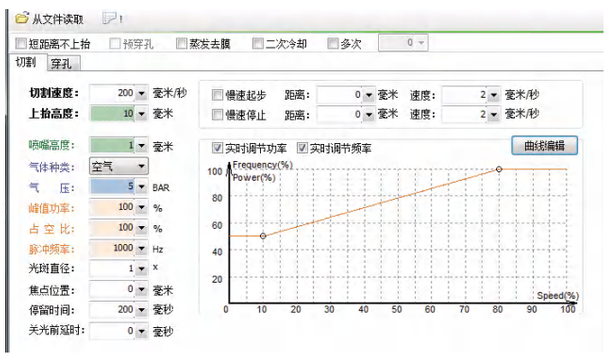

PARAMETERS - SUPERA				
Model	SuperA3015	SuperA4020	SuperA6020	SuperA6025
Machining area (mm)	3000×1500	4000×2000	6000×2000	6000×2500
X-axis stroke (mm)	1550	2050	2050	2550
Y-axis stroke (mm)	3050	4050	6050	6050
Z-axis stroke (mm)	300	300	300	300
Positioning precision of X/Y axis (mm/m)	±0.03	±0.03	±0.03	±0.03
Repetitive positioning precision of X/Y axis (mm/m)	0.02	0.02	0.02	0.02
Maximum speed (m/min)	120	120	120	120
Maximun acceleration speed (g)	1.2	1.2	1.2	1.2
Laser source power (W)	≤6000	≤6000	≤6000	≤6000
Dimensions (mm)	9000×3000×2500	11000×3500×2500	15500×3600×2500	15500×4100×2500

SUPERH
Fiber Laser Cutting Machine

SuperH series fiber laser cutting machine for high power cutting applications, using a full package body, the laser technology and CNC technology deep integration. It does ultra-high speed cutting of thin plates, high efficiency processing of medium and thick plates, and a wider range of processed materials.

PRODUCT FEATURES

Semi-Hollow Structure Bed (Patented)

Adopting thick steel plate to be welded as a whole, annealing to eliminate stress, it has good rigidity, high strength and good stability. The semi-hollow design of the cutting area, the increase of heat insulation materials to strengthen the performance of anti-burning and heat insulation, while blocking the thermal deformation of the frame, so that the machine tool will not be deformed for a long time.

High Rigidity, Lightweight Welded Steel Beam

The beam is welded with bent steel plate and tenon structure reinforcement, which has high rigidity and light weight. With the combination of high-performance servo motor and bus system, it has high processing accuracy and faster moving speed.

FSCUT8000 CNC System

The laser advanced intelligent bus system meets the needs of ultra-high power fiber laser cutting of 8KW and above. The control is more intuitive and comfortable. Fully closed-loop control, the machine tool has better responsiveness and control accuracy, and supports higher acceleration. EtherCAT bus communication has strong anti-interference and can transmit over long distances. Powerful functions, better performance, and more convenient docking of industrial automation and intelligence.

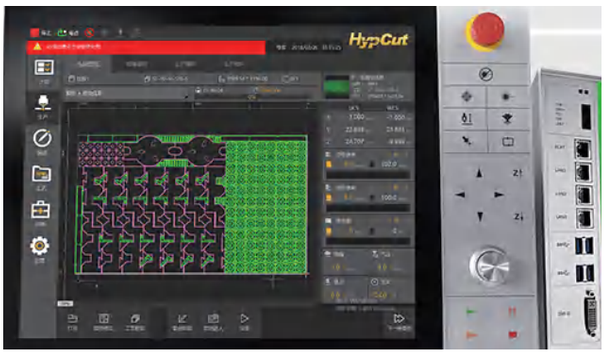

Precitec Fiber Cutting Head

Equipped with the German Precitec high-power cutting head, it can realize non-inductive perforation, smart cutting, highspeed leapfrogging, ultra-small taper cutting, high-gloss cutting, etc. High-power focusing, more efficient cooling, real-time early warning and monitoring, to ensure the stable and long-term operation of the machine. The transmission mechanism adopts German STOBER reducer and Atlanta gear and rack with European configuration and conscientious quality.

Dual Proportional Valve Air Circuit Control

The cutting gas high and low pressure are controlled separately. It is used for high-power cutting to adapt to more types of sheets and a larger process range. The high-pressure proportional valve controls high-pressure nitrogen/air, with a maximum pressure resistance of 50kg, and an adjustable pressure range of up to 30kg. The low-pressure proportional valve controls the oxygen pressure, the pressure is small when cutting low-pressure gas, and the flow control is more precise.

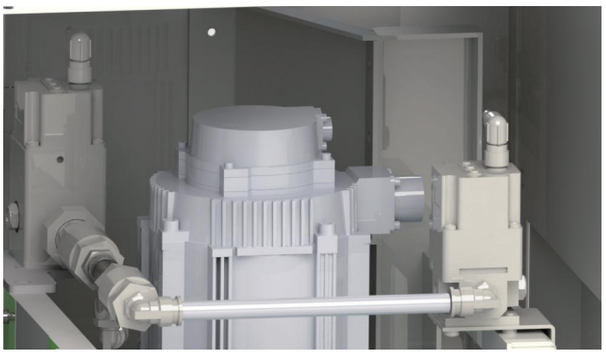

Double-side Zoning Air Extraction Design

Both sides of the cutting area are equipped with partition dust removal device, and the control cylinder and pipeline are external. The high-power cutting failure rate is low, the sealing effect is good, the air volume loss of the air duct is small, and the dust removal effect is excellent.

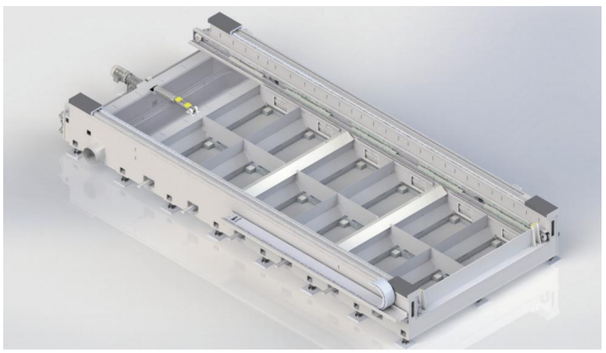

High-speed Exchange Dual Platform

Adopt double-side chain-driven double platform horizontal exchange structure, fast exchange speed, to ensure that the cutting box is more stable and efficient when the full load exchange.

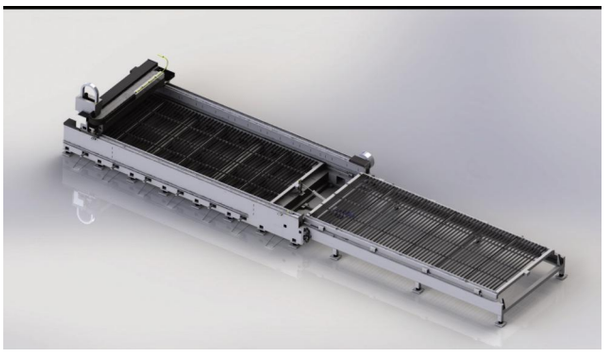

PARAMETERS - SUPERH				
Model	SuperH3015	SuperH6025	SuperH8025	SuperH12025
Machining area (mm)	3000x1500	6000×2500	8000×2500	12050×2550
X-axis stroke (mm)	1550	2550	2550	2550
Y-axis stroke (mm)	3050	6050	8050	12050
Z-axis stroke (mm)	300	300	300	300
Positioning precision of X/Y axis (mm/m)	±0.03	±0.03	±0.03	±0.03
Repetitive positioning precision of X/Y axis (mm/m)	0.02	0.02	0.02	0.02
Maximum speed (m/min)	140	140	140	140
Maximun acceleration speed (g)	1.5	1.5	1.5	1.5
Laser source power (W)	6000-15000	6000-15000	6000-15000	6000-15000
Dimensions (mm)	9750x3050x2600	15500×4200×2600	19550×4200×2600	28000×4200×2600

SUPERL
Large Table Fiber Laser Cutting Machine

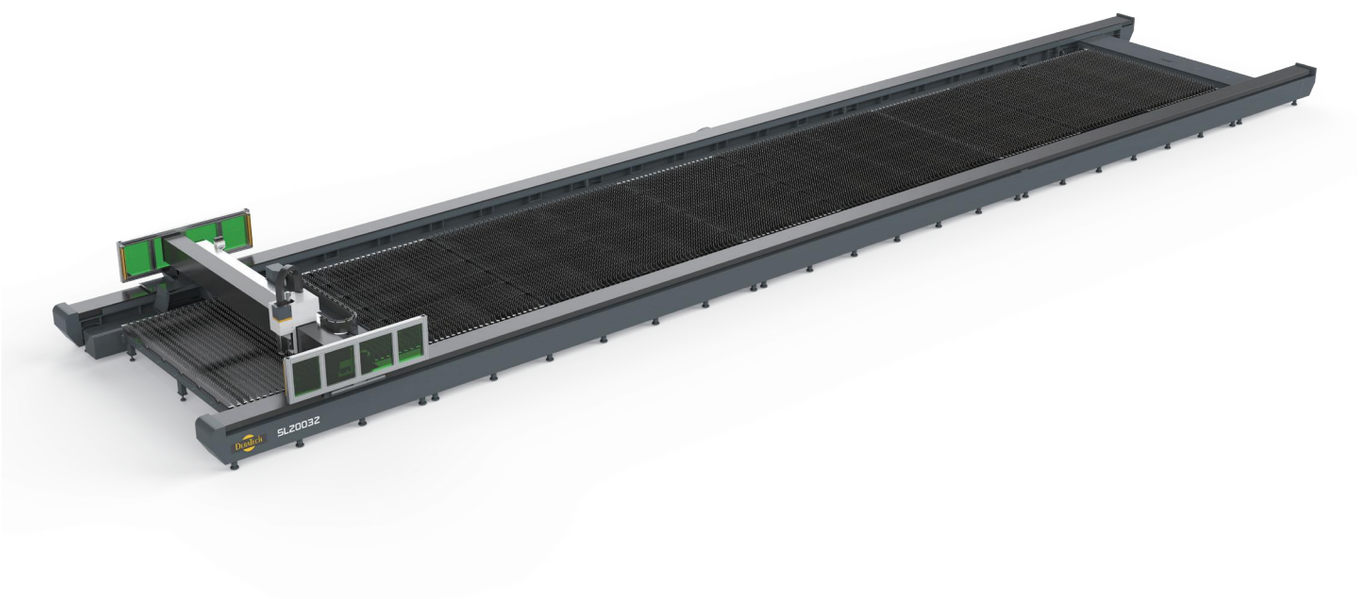

SuperL series large table fiber laser cutting machine, can be customized according to demand, high power processing, easy to handle large format plates, super long, super wide, split splicing gantry frame, high strength welded steel beam, processing accuracy and efficiency, energy saving and environmental protection.

PRODUCT FEATURES

Split Splicing Floor Gantry Rack

The symmetrical design of segmented box ensures the rigidity of bed machining and high precision of assembly; the segmented design is easy to disassemble and assemble, convenient and efficient.

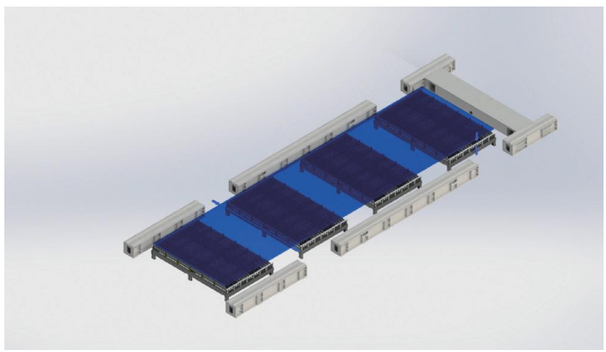

Extra-long span lightweight welded steel beam

Unique welding and heat treatment process. Lightweight and rigid cross-section of the beam to ensure efficient use of the equipment.

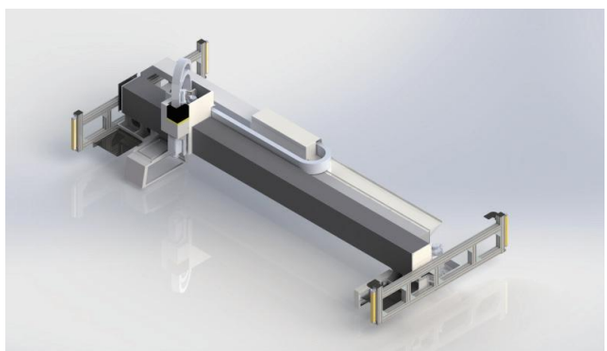

Modular assembled material table

Modular design, can be replaced as a whole or individually, more convenient replacement of wearing parts The modular design can be replaced as a whole or individually, so that the wearing parts can be replaced more easily and the user can have higher production efficiency.

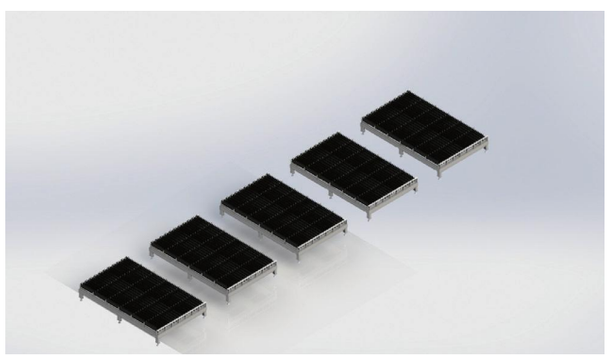

Safety Light Curtain and Monitoring Device

In addition to proximity switches and hard limit protection, the machine is also equipped with safety light curtains and monitoring devices in the cross beam and Z-axis sections. Once the safety light curtain is obscured, the machine will stop running immediately, effectively protecting the operator's personal safety.

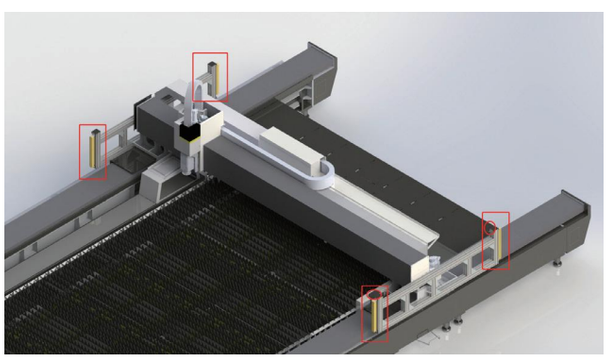

Dual Proportional Valve Gas Control

Separate control of cutting gas high and low pressure. For high power cutting use to accommodate a wider variety of plates and a wider range of processes. High pressure proportional valve control High pressure nitrogen/air control up to 50kg with adjustable pressure range up to up to 30kg. Low pressure proportional valve controls oxygen pressure, low pressure gas cutting The low pressure proportional valve controls the oxygen pressure, which allows for low pressure gas cutting and more accurate flow control.

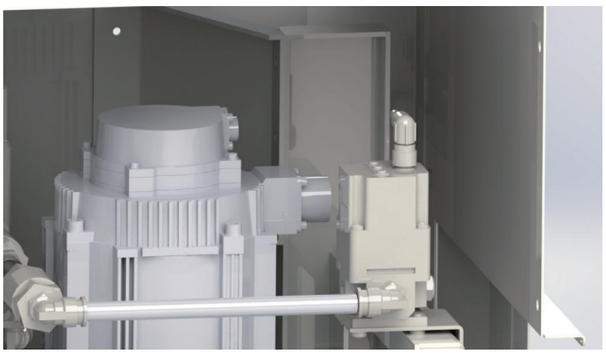

PARAMETERS - SUPERL						
Model	SuperL12025	SuperL15025	SuperL20025	SuperL12032	SuperL15032	SuperL20032
Machining area (mm)	12000x2500	15000x2500	20000x2500	12000×3200	15000×3200	20000×3200
X-axis stroke (mm)	2550	2550	2550	3250	3250	3250
Y-axis stroke (mm)	12100	15100	20100	12100	15100	20100
Z-axis stroke (mm)	200	200	200	200	200	200
Positioning precision of X/Y axis (mm/m)	±0.05	±0.05	±0.05	±0.05	±0.05	±0.05
Repetitive positioning precision of X/Y axis (mm/m)	0.1	0.1	0.1	0.1	0.1	0.1
Maximum speed (m/min)	80	80	80	80	80	80
Maximun acceleration speed (g)	0.5	0.5	0.5	0.5	0.5	0.5
Laser source power (W)	12000-20000	12000-20000	12000-20000	12000-20000	12000-20000	12000-20000
Dimensions (mm)	14550x4900x2000	20000x4900x2000	24550x4900x2000	14550×5550×2000	20000×5550×2000	24550×5550×2000

SUPERS
Single Table Fiber Laser Cutting Machine

The SuperS series is a single-table laser cutting machine with an overall compact size. Compared with the previous large table laser cutting machine with exchange table, it has obvious advantages of size and space, and is suitable for "small and fast" type of processing.

PRODUCT FEATURES

High Intensity Main Machine Body

Integral gantry structure, independent processing of high-strength steel plate welded bed, annealing Stress relief treatment, sufficient rigidity, small deformation.

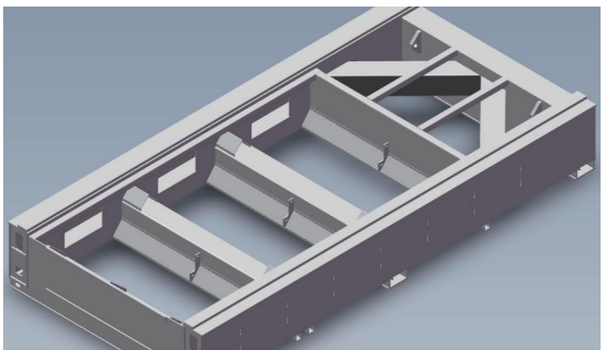

Aviation Level Special Formed Aluminum Beam

Adopting lightweight design concept and finite element optimization analysis, the dynamic performance is good. The beam base and Z-axis slide plate adopts high-strength cast aluminum integrated molding design, which is lightweight, compact, high-precision, and quick-response.

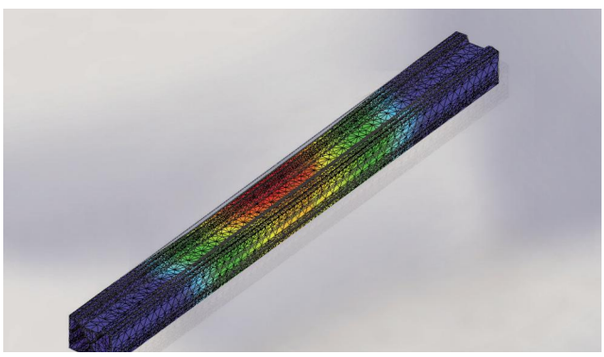

Weihong NcStudio-V15 CNC System

High speed and high precision, easy and intuitive. Real-time display of cutting status, showing the current position, through the system can quickly switch a variety of cutting auxiliary gases.

PARAMETERS - SUPERS				
Model	SuperS3015	SuperS4015	SuperS4020	SuperS6020
Machining area (mm)	3000×1500	4000x1500	4000×2000	6000×2050
X-axis stroke (mm)	1550	1550	2050	2050
Y-axis stroke (mm)	3050	4050	4050	6050
Z-axis stroke (mm)	100	100	100	100
Positioning precision of X/Y axis (mm/m)	±0.03	±0.03	±0.03	±0.03
Repetitive positioning precision of X/Y axis (mm/m)	0.02	0.02	0.02	0.02
Maximum speed (m/min)	120	120	120	120
Maximun acceleration speed (g)	1.2	1.2	1.2	1.2
Laser source power (W)	⩽3000	⩽3000	⩽3000	⩽3000
Dimensions (mm)	4750×2480×2100	5785x2480x2100	5785×3720×2100	7785×3720×2100

TE
Fiber Laser Cutting Machine

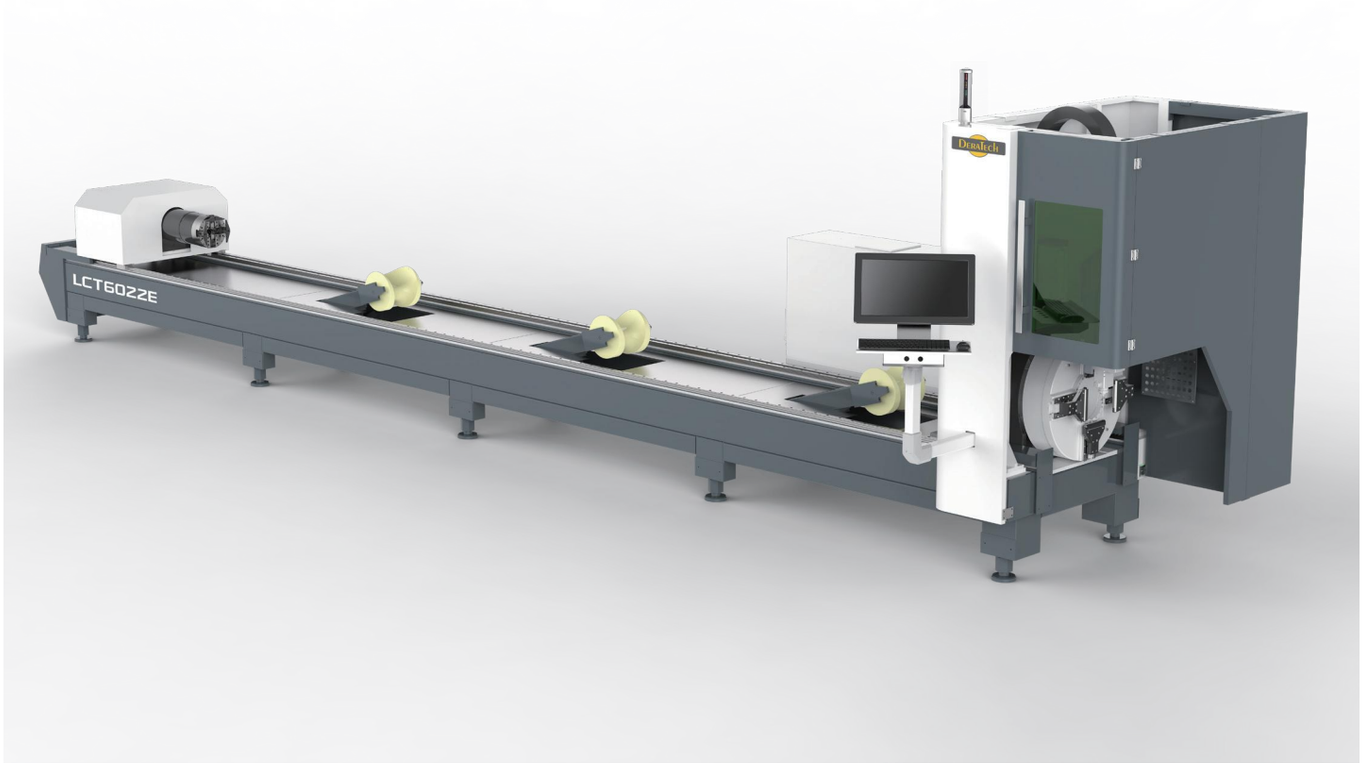

TE series laser tube cutting machine is a cost-effective laser processing equipment developed and designed for the needs of tube type material processing field. No mold opening is required, which greatly saves time for new product development, fast cutting speed and high precision, and the tube laser cutting machine can realize precision cutting of various complex shapes that are difficult to be achieved by opening, cutting off, coherent lines and conventional methods.

PRODUCT FEATURES

Double Pneumatic Chucks

Speed far exceeds that of electric chucks, reducing loading and unloading times. Steady clamping force, always Clamp the pipe tightly to ensure the cutting accuracy and prevent out of shape.

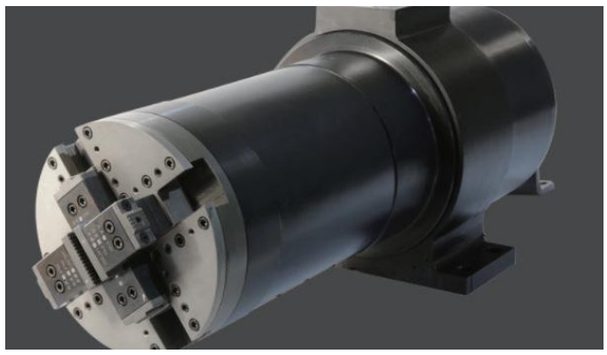

Gantry Beam Structure

High-speed screw module drive, more stable cutting operation; auxiliary support makes feeding easier and simpler.

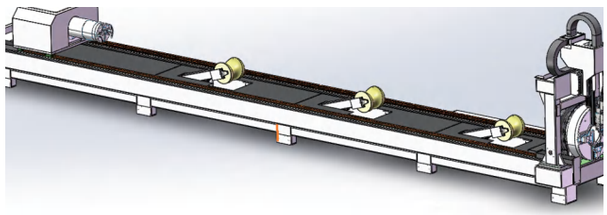

Weihong TU3000-TB software

The software provides a total motion control solution for the tube cutting industry, supporting Supports multiple tube types, truncation / open hole / coherent hole / vertical coherent light path guide. It can be used on dedicated tube cutting machines or integrated tube and plate machines for a wide range of applications in outdoor lighting It is widely used in outdoor lighting, furniture, display frame, doors and windows, architecture, sports equipment and other industries.

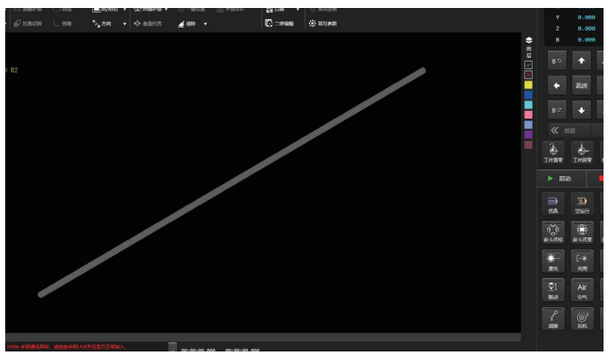

PARAMETERS - TE		
Model	TE6022	TE6035
Chuck form	Pneumatic	Pneumatic
Range of diameter of square tube (mm)	Φ 20-220	Φ 20-350
Square tube side length range (mm)	□ 20-150	□ 20-350
Max. length of pipe (mm)	6000	6000
Maximum weight of single pipe (kg)	170	600
Positioning precision (mm/m)	±0.05	±0.05
Repeatability (mm)	±0.03	±0.03
Max. chuck revolutions (r/min)	90	90
Max. empty running speed (m/min)	90	80
Max. acceleration (G)	0.8	0.5
Dimension (mm)	8870×2020×2130	12600x1850x2600

SUPER S-F
Laser Cutting And Coiling Line

Super S-F series laser coil cutting production line, integrating four functions of uncoiling, feeding, cutting and discharging, is applied to metal doors and windows, HVAC equipment, chassis and cabinets, shelves, filing cabinets and other sheet metal production industries. The production line overturns the traditional processing method and turns into a one-stop processing line, realizing continuous automatic production, significantly reducing labor input, improving equipment and material utilization, and creating more value for customers.

PRODUCT FEATURES

Multi-Function

It has four functions of uncoiling, feeding, cutting and discharging.

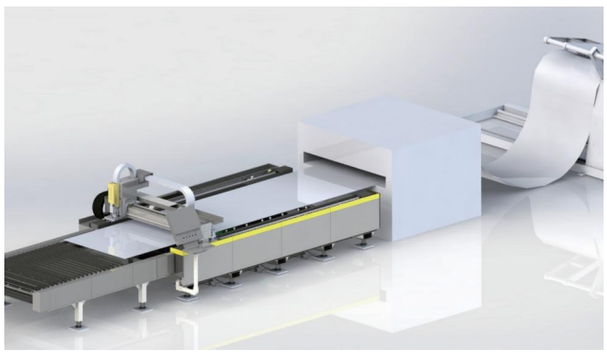

Economical and Practical

The hydraulic leveling machine does not need to dig a foundation pit, which reduces the preliminary investment and facilitates equipment shifting; the rolling cycle support bar structure of the table realizes automatic discharging and reduces the scratch on the surface of the sheet.

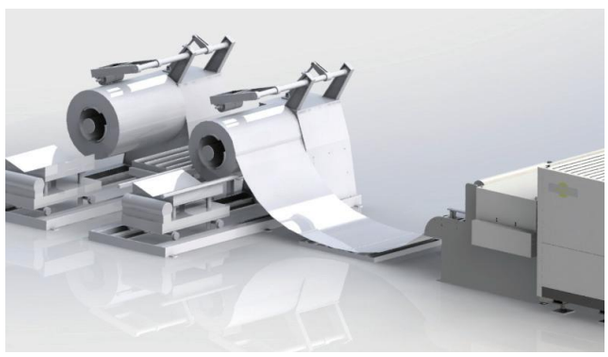

Flexible Processing

Unwinding and clamping length size can be freely set, and any shape of parts can be flexibly switched; quickly respond to the needs of production changes, just import the corresponding program, you can produce different products.

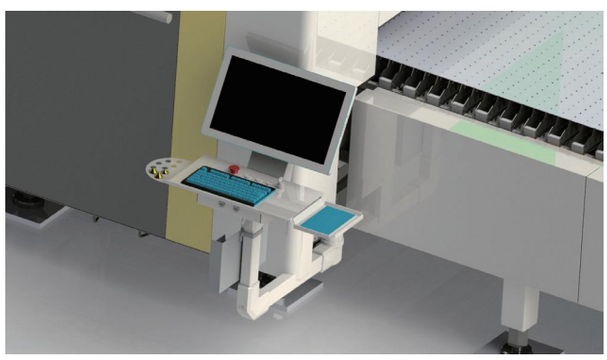

Optional For More Functions

Optional robotic unscrambler for intelligent sorting and palletizing, saving labor; expandable winding / laminating / waste collection, etc. for multi-process integration; optional multiple hydraulic unscramblers for flexible switching of different board thicknesses, reducing non-cutting production time; optional double-beam and double-head cutting for multi-speed cutting production.

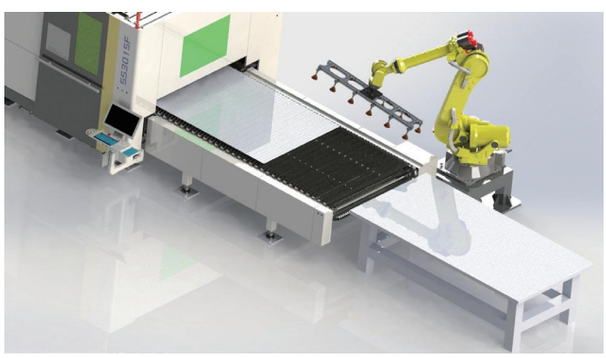

PARAMETERS - SUPER S-F		
Model	SuperS3015F	SuperS4015F
Applicable materials	Cold-rolled steel sheets, galvanized sheets, stainless steel sheets, etc. (σs≤250Mpa、σb≤490Mpa)	Cold-rolled steel sheets, galvanized sheets, stainless steel sheets, etc. (σs≤250Mpa、σb≤490Mpa)
Coil thickness	0.5-2.0mm	0.5-2.0mm
Coil width	400-1500mm	400-1500mm
Inner diameter of steel coil	Φ508mm	Φ508mm
Outer diameter of steel coil	≤Φ1500mm	≤Φ1500mm
Reel up and down range	Φ480~Φ530mm	Φ480~Φ530mm
Steel coil weight	≤10T	≤10T
Length precision	≤ 0.5mm (长 2000mm)	≤ 0.5mm (长 2000mm)
Sheet flatness	≤ 1mm/m² (Genuine rolls, plate thickness≥0.5mm)	≤ 1mm/m² (Genuine rolls, plate thickness≥0.5mm)
Processing width (L × W)	3000mm×1500mm	4000mm×1500mm
X-axis stroke	3050mm	4050mm
Y-axis stroke	1550mm	1550mm
Z-axis stroke	100mm	100mm
X, Y axis positioning accuracy	±0.03mm/m	±0.03mm/m
X, Y axis repeatable positioning accuracy	±0.02mm	±0.02mm
X, Y axis maximum speed	100m/min	100m/min
Max. acceleration	1.0G	1.0G

FMC
Laser Cutting Flexible Processing Unit

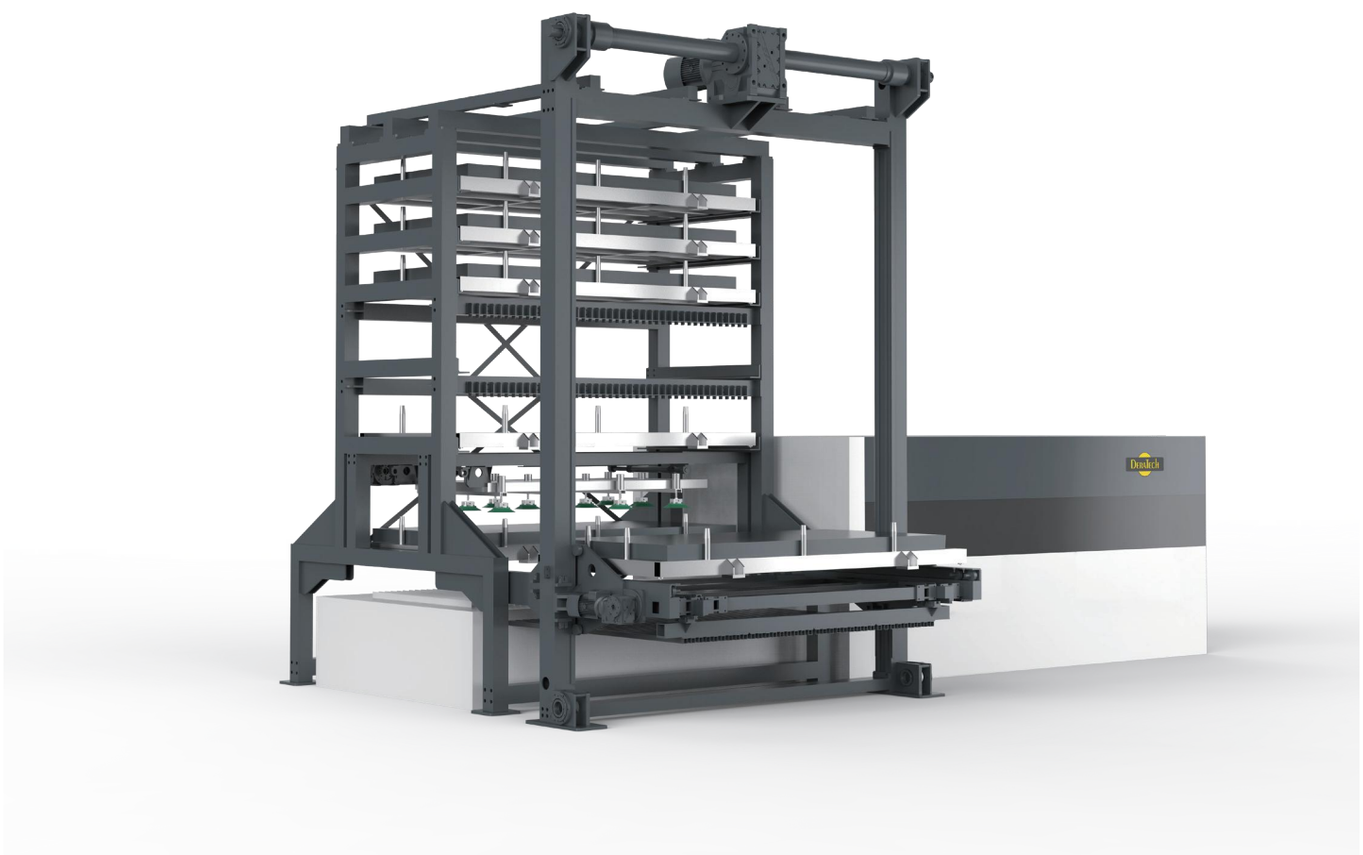

It consists of laser cutting machine, automatic stock, loading and unloading device. It automatically completes the picking up, loading, cutting and unloading of plates, and realizes the batch continuous processing of many specifications of plates.

FMC
Automatic Loading and Unloading

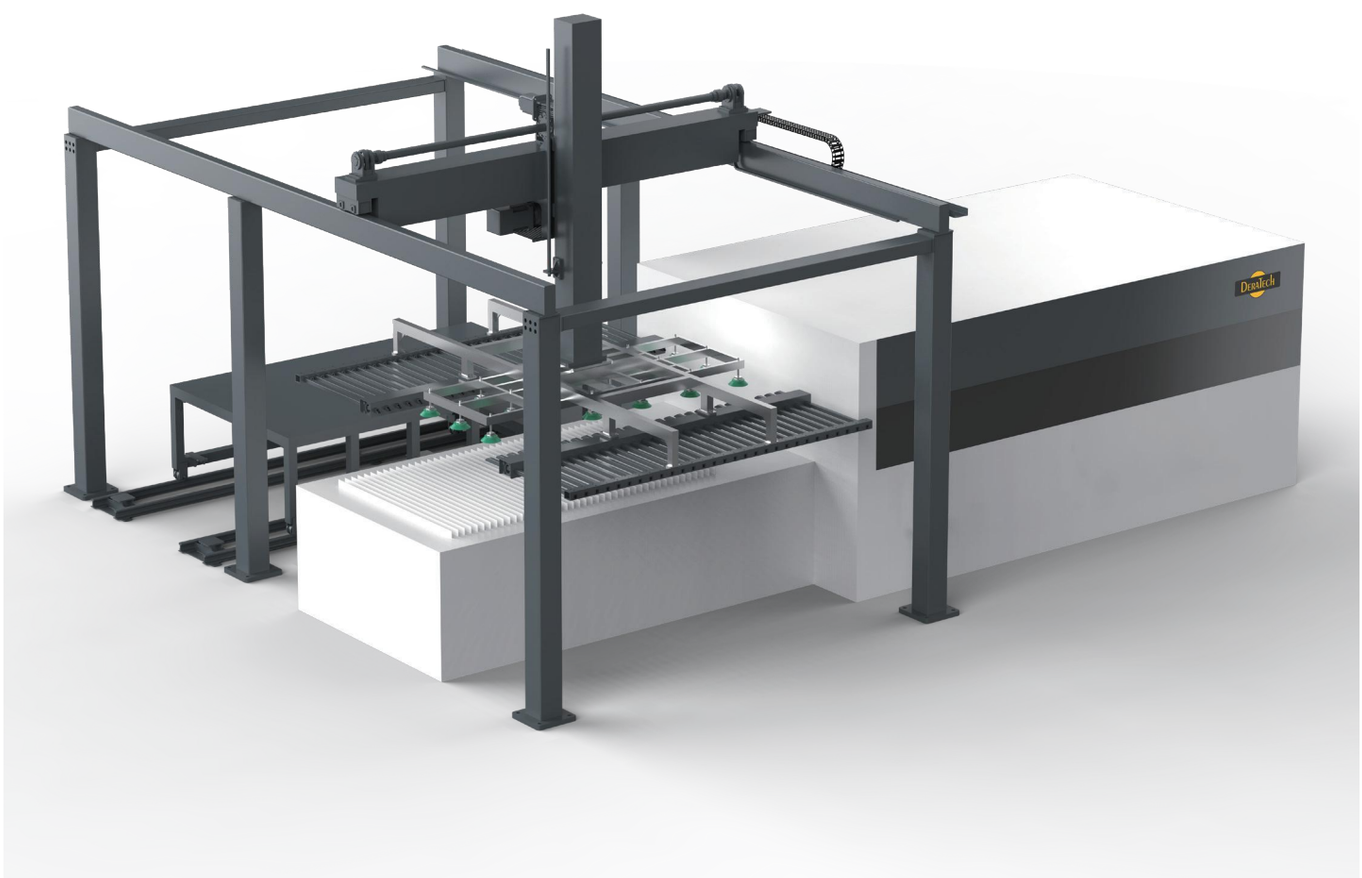

This unit can automatically complete the loading, cutting and unloading of sheet material, significantly improving processing efficiency.

FMS
Laser Cutting Flexible Machining System

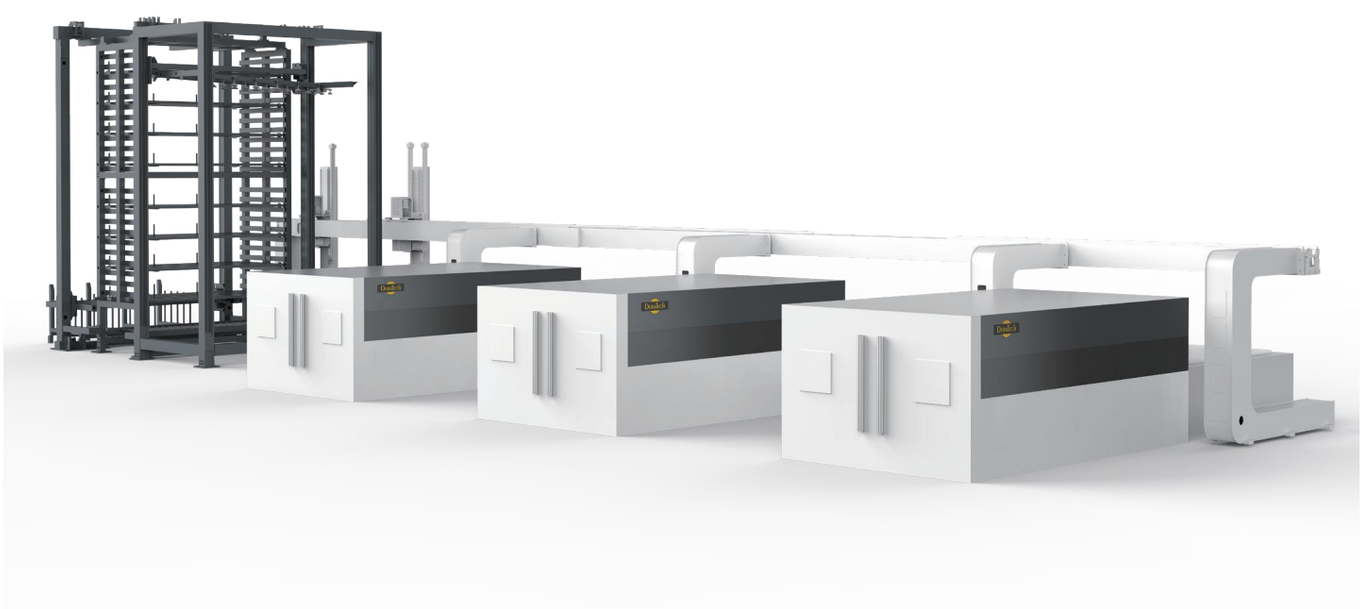

The system consists of a single row of multi-layer magazine, automatic loading and unloading device and three laser cutting machines. It can automatically complete a series of uninterrupted production processes from sheet inlet and outlet to automatic loading, cutting and processing, and automatic unloading. It is compatible with the mainframe processing tasks and multi-task production management, optimizing the processing path and improving the loading and unloading efficiency.

PAC
CNC Hydraulic Swing Beam Shears

Fashionable industrial style appearance, ergonomic design for easy operation, high efficiency and stability, high cost performance, low failure rate.

PRODUCT FEATURES

Verticality Adjustment and Front Positioning Device

Solid squaring arm with ruler, installed on the left side of the machine to ensure the cutting precision.

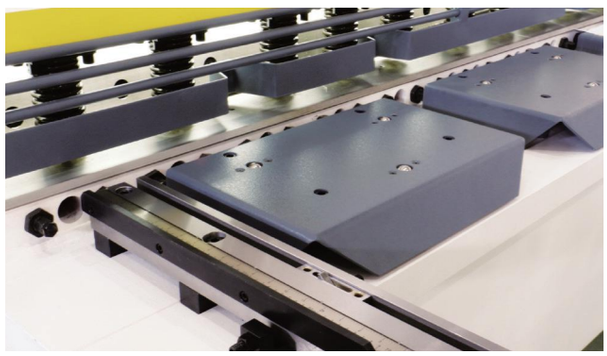

CNC Blade Gap Adjustment Device

Manual adjustment for stepless adjustment of cutter clearance.

Backgauge System

Precision ball screw, linear guide structure, high performance servo motor drive to ensure positioning accuracy.

Backgauge Automatic Lifting Structure

The backgauge can lift automatically to cut workpieces that are beyond the stopping range.

Light-to-Wire and Pressurized Material Device

Use of light, line shadow, convenient manual scribing cut. Unique structure design for the hold-down cylinders; a special built-in spring structure with high quality inserts to avoid markings on sensitive materials that need to be cut.

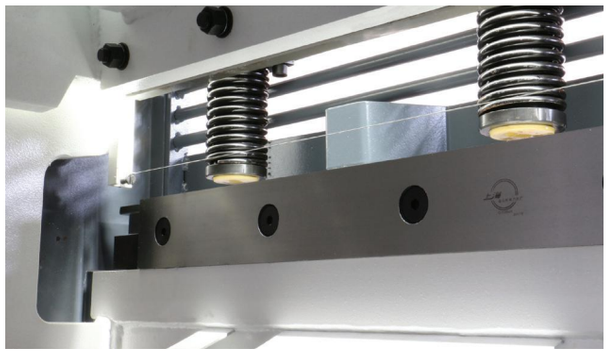

Hydraulic System

Hydraulic drive, smooth operation. Integrated hydraulic system, effectively reduce the problems caused by hydraulic oil leakage.

Blades

Made of high quality alloy tool steel to meet the impact load during shearing.

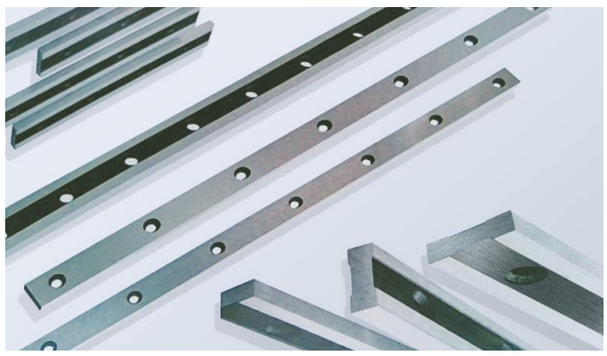

Steel Ball Transfer Structure of Working Table

The use of rolling steel balls reduces frictional resistance and ensures that the surface of the workpiece is not scratched.

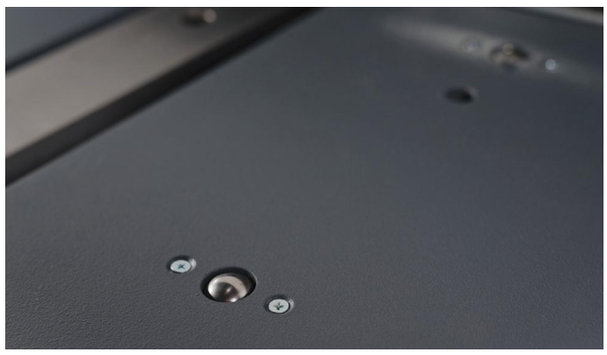

Protective Devices

Protect the operator safety, ensures the safety of the operator when cutting small parts.

CNC SYSTEM

Switzerland Cybelec CT8

· Intuitive and easy-to-operate interactive interface
· Quickly complete the cutting board setting
· Programming product preservation
· 2 or 3 stops of back gauge finger
· Automatic continuous cutting
· Help alarm information prompt
· Automatically adjust the blade gap
· Automatic control of cutting angle
· Automatic correction of back gauge.
· Support more than 10 languages

Direction A

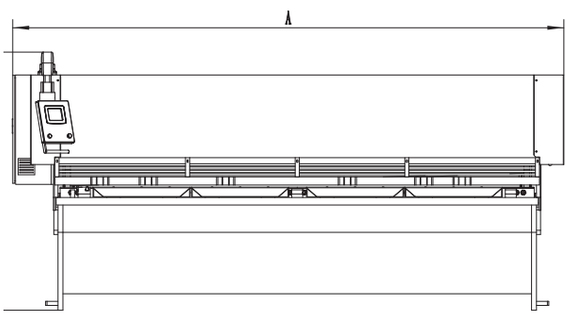

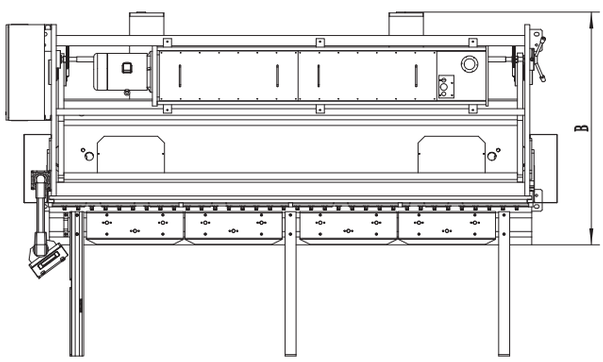

PARAMETERS - PAC

Model	Max cutting thickness (mm)	Max cutting length (mm)	Distance between uprights (mm)	Strokes (n/min)	Backgauge stroke (mm)	Cutting angle (°)	Worktable height (mm)	Throat depth (mm)	Main power (kW)	Oil (L)	Dimensions (mm)			Weight (kg)
											Length	Width	Height	
PAC-4×2500	4	2500	2710	22	600	1.5	900	100	7.5	220	3100	1470	1870	5100
PAC-4×3200	4	3200	3410	20	600	1.5	900	100	7.5	290	3820	1500	1890	6700
PAC-4×4000	4	4000	4220	15	600	1.5	900	100	7.5	290	4652	1660	1900	7800
PAC-4×6000	4	6000	6190	10	600	1.5	900	100	11	290	6600	2170	2210	16300
PAC-6×2500	6	2500	2720	20	600	1.5	900	100	7.5	220	3130	1570	1890	6100
PAC-6×3200	6	3200	3420	18	600	1.5	900	100	7.5	290	3840	1610	1910	6900
PAC-6×4000	6	4000	4220	15	600	1.5	900	100	7.5	290	4630	1850	1990	9200
PAC-6×5000	6	5000	5620	12	600	1.5	900	100	11	290	5700	2020	2160	14300
PAC-6×6000	6	6000	6230	10	600	1.5	900	100	11	290	6650	2170	2210	18300
PAC-8×2500	8	2500	2760	14	600	1.5	900	100	11	220	3190	1600	1910	6300
PAC-8×3200	8	3200	3460	12	600	1.5	900	100	11	290	3900	1680	1940	8800
PAC-8×4000	8	4000	4260	10	600	1.5	900	100	11	290	4680	1900	2010	10100
PAC-8×5000	8	5000	5255	8	600	1.5	900	100	11	290	5720	2270	2200	19500
PAC-8×6000	8	6000	6225	6	600	1.5	900	100	11	290	6670	2270	2340	23300
PAC-10×3200	10	3200	3500	10	800	1.5	900	100	15	420	3960	2025	2185	11800
PAC-10×4000	10	4000	4300	8	800	1.5	900	100	15	420	4760	2135	2220	14500
PAC-12×2500	12	2500	2755	12	800	1.5	900	100	18.5	360	3235	2045	2120	10000
PAC-12×3200	12	3200	3465	9	800	1.5	900	100	18.5	500	3945	2270	2270	13000
PAC-12×4000	12	4000	4265	7	800	1.5	900	100	18.5	500	4745	2320	2470	17000
PAC-16×2500	16	2500	2775	7	800	2.5	900	100	22	360	3390	2160	2380	12500
PAC-16×3200	16	3200	3485	6	800	2.5	900	100	22	500	4100	2300	2545	16000
PAC-16×4000	16	4000	4285	5	800	2.5	900	100	22	500	4850	2350	2545	20000
PAC-20×2500	20	2500	2785	6	800	2.5	900	100	45	540	3440	2350	2630	18500
PAC-20×3200	20	3200	3485	5	800	2.5	900	100	45	800	4140	2450	2660	22500
PAC-20×4000	20	4000	4285	5	800	2.5	900	100	45	800	4940	2500	2675	25500

VAC
CNC Hydraulic Guillotine Shears

Powerful, efficient and reliable, can be equipped with a variety of auxiliary devices.

PRODUCT FEATURES

Verticality Adjustment and Front Positioning Device

Solid squaring arm with ruler, installed on the left side of the machine to ensure the cutting precision.

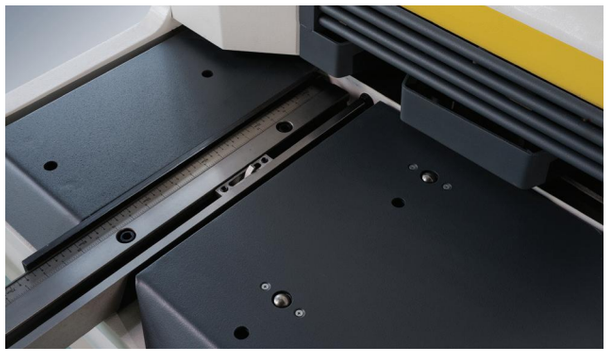

CNC Blade Gap Adjustment Device

The upper and lower knife edge clearance is automatically adjusted by the system to improve the cutting cutting quality.

Backgauge System
Backgauge device + automatic backgauge lifting structure

Precision ball screw, linear guide structure, high performance servo motor drive to ensure positioning accuracy. The backgauge can lift automatically to cut workpieces that are beyond the stopping range.

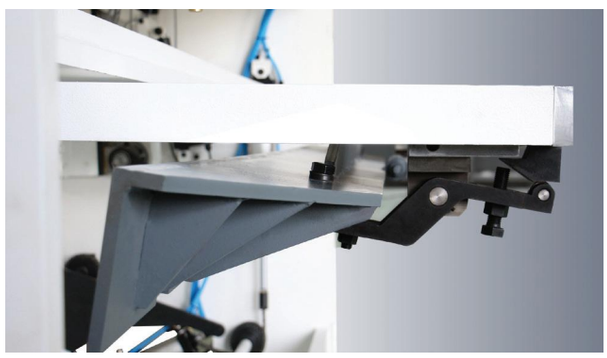

Light-to-Wire and Pressurized Material Device

Use of light, line shadow, convenient manual scribing cut. Unique structure design for the hold-down cylinders; a special built-in spring structure with high quality inserts to avoid markings on sensitive materials that need to be cut

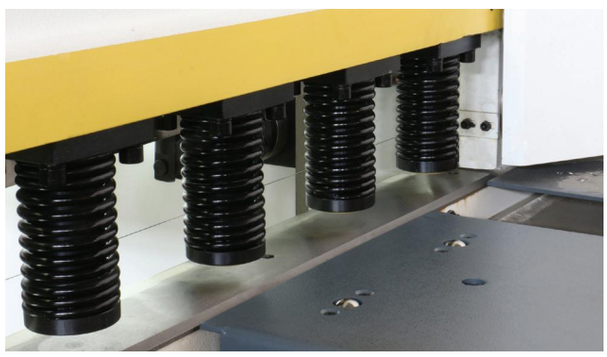

Hydraulic System

Hydraulic drive, accumulator return, smooth and reliable operation, integrated hydraulic system System design, effectively reduce the problems caused by hydraulic oil leakage.

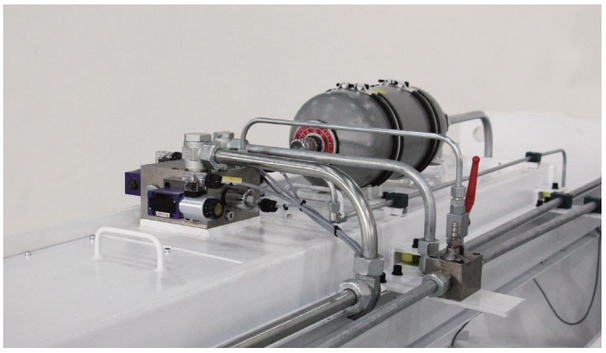

Steel Ball Transfer Structure of Working Table

The use of rolling steel balls reduces frictional resistance and ensures that the surface of the workpiece is not scratched.

CNC SYSTEM

Switzerland Cybelec CT8

· Intuitive and easy-to-operate interactive interface
· Quickly complete the cutting board setting
· Programming product preservation
· 2 or 3 stops of back gauge finger
· Automatic continuous cutting
· Help alarm information prompt
· Automatically adjust the blade gap
· Automatic control of cutting angle
· Automatic correction of back gauge.
· Support more than 10 languages

PARAMETERS - VAC												
Model	Max cutting thickness (mm)	Max cutting length (mm)	Distance between uprights (mm)	Strokes (n/min)	Backgauge stroke (mm)	Cutting angle (°)	Main power (kW)	Oil (L)	Dimensions (mm)			Weight (kg)
									Length	Width	Height	
VAC-6×4050E	6	4050	4420	15	600	1.5	11	300	4800	1720	1950	9600
VAC-6×3050	6	3050	3600	16-40	1000	0.5-2.5	15	300	4030	2116	2100	8400
VAC-6×4050	6	4050	4620	14-33	1000	0.5-2.5	15	300	5060	2200	2270	11500
VAC-6×5050	6	5050	5620	10-25	1000	0.5-2	15	360	6100	2200	2300	16000
VAC-6×6050	6	6050	6620	7-20	1000	0.5-2	15	360	7100	2300	2500	20000
VAC-8×3050	8	3050	3600	12-30	1000	0.5-2.5	15	300	4030	2116	2100	9500
VAC-8×4050	8	4050	4620	9-22	1000	0.5-2.5	15	300	5060	2300	2365	12500
VAC-8×5050	8	5050	5620	7-16	1000	0.5-2	22	360	6100	2200	2300	20000
VAC-8×6050	8	6050	6620	6-16	1000	0.5-2	22	360	7100	2300	2500	28000
VAC-10×3050	10	3050	3620	12-30	1000	0.5-2.5	22	420	4080	2165	2260	12000
VAC-10×4050	10	4050	4620	10-24	1000	0.5-2.5	22	420	5205	2320	2300	15000
VAC-10×6050	10	6050	6640	6-18	1000	0.5-2	22	420	7250	2350	2800	36500
VAC-13×3050	13	3050	3620	12-26	1000	0.5-2.5	30	540	4250	2300	2415	13700
VAC-13×4050	13	4050	4620	10-22	1000	0.5-2.5	30	540	5205	2350	2485	17000
VAC-16×3050	16	3050	3640	8-18	1000	0.5-2.5	30	540	4235	2300	2485	16000
VAC-16×4050	16	4050	4640	7-15	1000	0.5-2.5	30	540	5235	2350	2585	21000

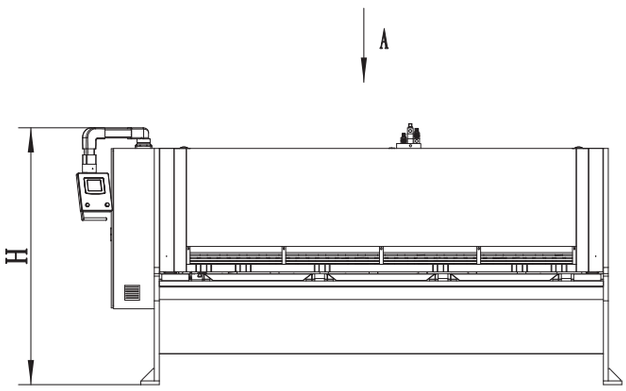

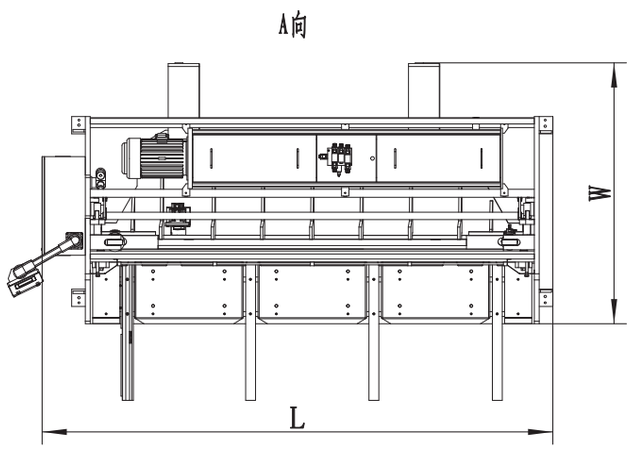

OPTIONAL CONFIGURATION

Pneumatic Sheet Support Device
Suitable for CNC Hydraulic Guillotine Shears

It can reduce the sagging deformation of the sheet in shearing and improve the shearing quality. The action of the pallet frame and the descending action of the knife frame are nearly synchronized, and the pallet arm of the pallet frame is equipped with rollers to facilitate the exit of the sheet.

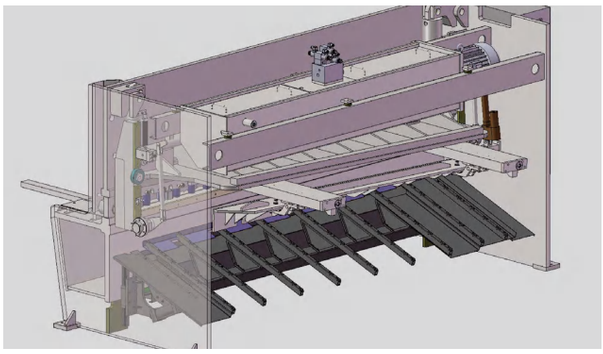

Removable Front Pallet

The support system can be moved left and right to meet the requirements of pallets with different widths. Brush plate can be installed on the working table and moveable front support system as an option to prevent scratching of the sheet.

Angle Positioning Device

The angle positioning device has a scale rod. By manually locating the lock with a fast handle and applied to the shear irregular plate parts.

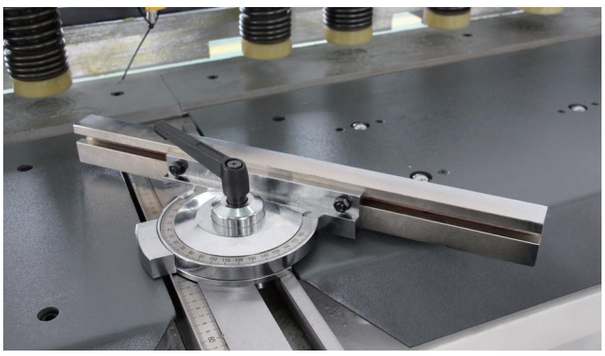

CNC Clearance Adjustment Device

Automatic positioning and fast adjustment.

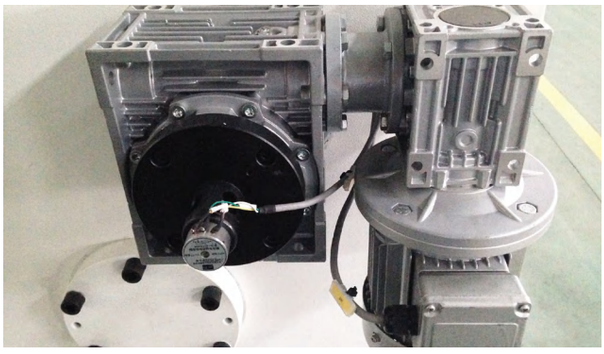

Front Feeding Device

Pneumatic gripper clamps the plate material, automatic feeding size shear, feeding table with universal ball, reduce the surface scratch of the plate material.

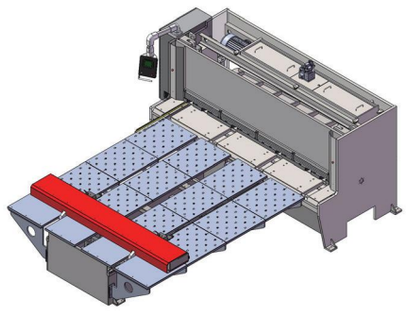

Rear Pallet Discharging Device

Pneumatic support hold sheet, hold the workpiece after cutting. Workpiece is transported by the transportation belt.

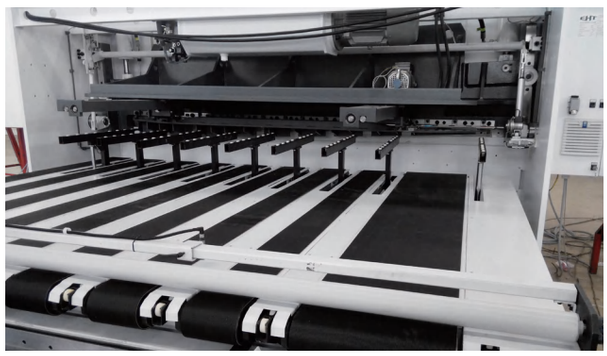

DAS
CNC Servo Turret Punching Machine

Industry leading servo drive technology, simple appearance, high energy and high efficiency.

PRODUCT FEATURES

Servo Main Drive

Adopting servo motor and crankshaft connecting rod direct drive structure, the structure is mature and reliable, and the special installation process effectively eliminates mechanical clearance, which makes it have the characteristics of high transmission accuracy, low noise and long life. The use of servo closed-loop motor can effectively improve the molding effect. The unique internal energy-saving design effectively recovers the braking energy generated during actual use and uses it again for stamping action, which minimizes the comprehensive energy consumption of the machine and effectively reduces the cost of using the machine.

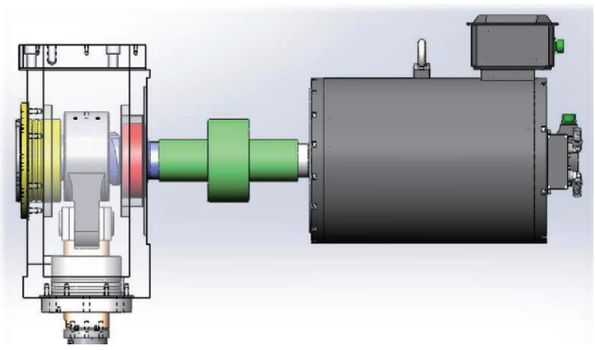

High Speed and Mute

Under the premise of ensuring efficiency, the servo control can be used to control the speed at any position, and combined with the speed requirements of different positions in the actual punching process, you can choose to adjust the punch speed in real time to reduce the noise during the sheet punching process, which provides operators a comfortable working environment.

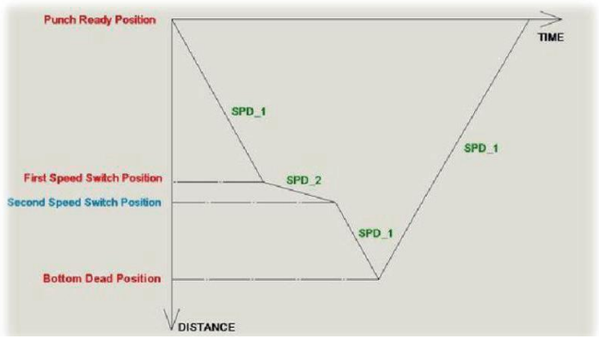

O-shaped Frame Structure

The main frame adopts an O-shaped body structure, which has good rigidity and small deformation. The overall annealing treatment after welding eliminates internal stress. The loading processing is completed at one time to ensure the stability and reliability of the machine tool for long-term work.

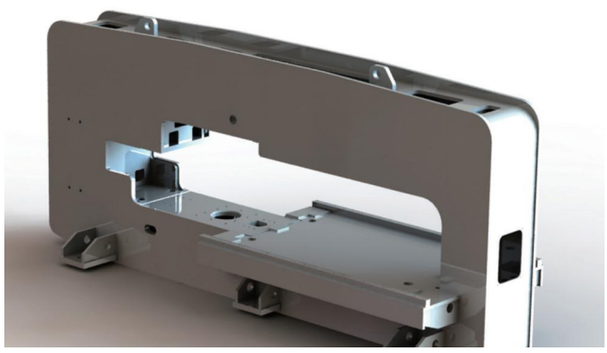

Water Cooler and Air Conditioner

The servo spindle is equipped with a water cooler, and the electric control box is equipped with an air conditioner to ensure that the servo spindle can run stably and at a high speed for a long time.

Turret

The thick turret structure made of spheroidal graphite cast iron has better guidance, higher precision, stronger loading capacity, and effectively suppresses vibration.

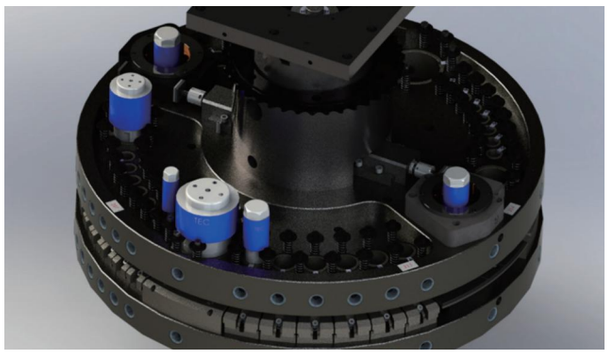

Hardened Tooling Sleeve

The main body of the tooling sleeve is processed by fine grinding after hardening. It has better wear resistance and is easy to replace, which effectively improves the service life of the tooling and the turret.

Auto-Index (Station)

Adopt normal mesh transmission structure, higher repeat positioning accuracy, more stable structure, standard with two B-station rotary tooling, suitable for punching and cutting of any graphics, higher efficiency.

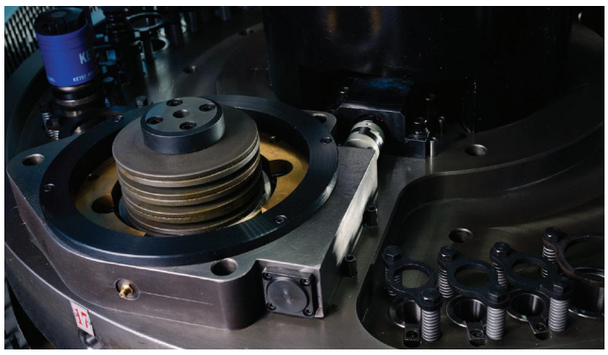

Turret Drive

With precision imported reducer, compact structure, small backlash, high transmission accuracy, smooth and reliable, no maintenance.

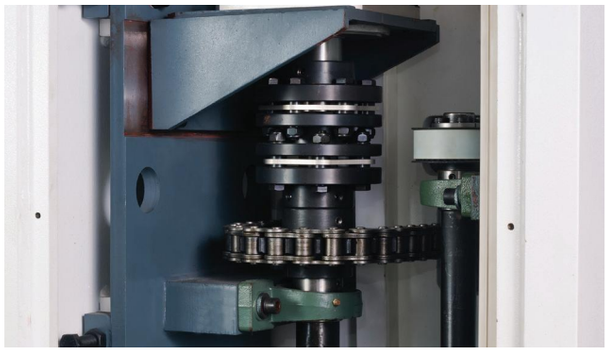

Tooling

Standard thick turret long tooling, good guiding performance, long life and higher precision.

Feeding Mechanism

The feeding mechanism adopts Japanese THK grinding grade ball screw and large diameter linear guide, servo direct drive design, higher positioning accuracy, faster running speed and lower noise.

Gripper

Floating type pneumatic clamps can clamp workpieces stably and reliably, better adapt to different plates, and effectively improve the quality of punching.

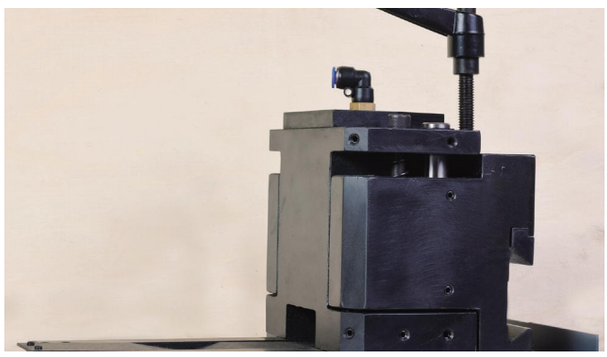

Brush Insert Roller Ball Table

The high-density brush table inlaid with a few rolled balls makes low feeding noise and protects the surface of the board.

Repositioning and Sheet Metal Deformation Detection

Effectively achieves blind-free, extra-long plate processing and material saving. It can suppress collision caused by plate deformation in time, while protecting machines and parts.

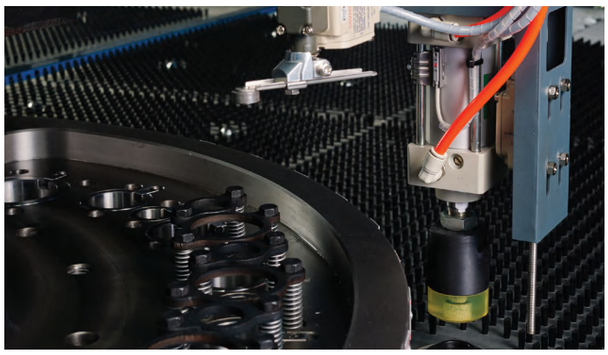

Automatic Lubrication System

The CNC system can time the feeding mechanism and quantitatively provides oil to ensure that the screw rod and guide rail are fully lubricated. The built-in liquid level detection switch ensures that the lubrication system does not work without oil, and the CNC system makes a prompt.

Layout Of Turret Working Position

The standard is a 32-position turret, with an optional 32-position (slightly different from the standard, see the station layout) or 44-position turret.

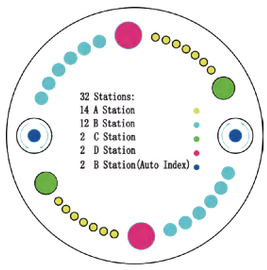

32 workstation layout (standard)

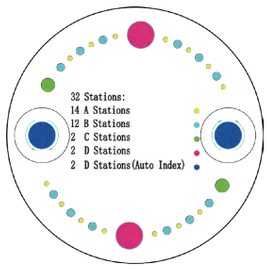

32 workstation layout

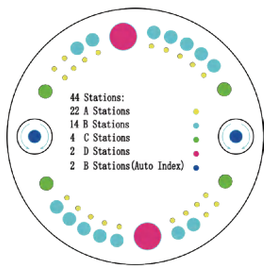

44 workstation layout

CNC System and Automatic Programming Software

Japan FANUC 0i-PF CNC System

· 10.4 inch colorful display control integrated control unit
· Interactive interface
· Multi-language switching
· USB port
· Ethernet communication
· RCS232 communication
· Multiple methods of program transmission

Israel CNCKAD Programming Software

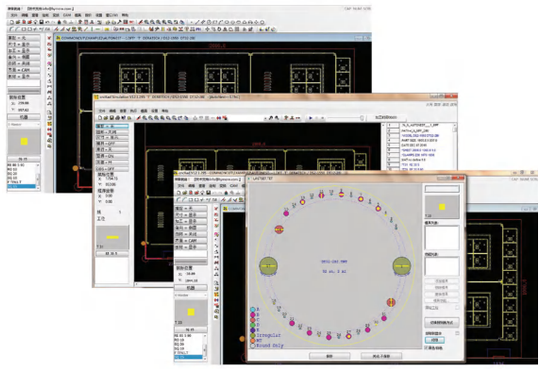

· Support multi-languauge
· Simple to learn, simple to operate
· Mold library management
· Automatic mold matching processing, saving time and high efficiency
· Automatic & manual path optimization
· Graphical simulation function
· Processing report generation function, conducive to production control

OPTIONAL CONFIGURATION

Germany SIEMENS 840Dsl CNC System

USB port, Ethernet interface, RCS232 complete set of Germany Siemens CNC system and servo motor, to achieve precise control and stable operation of the machine.

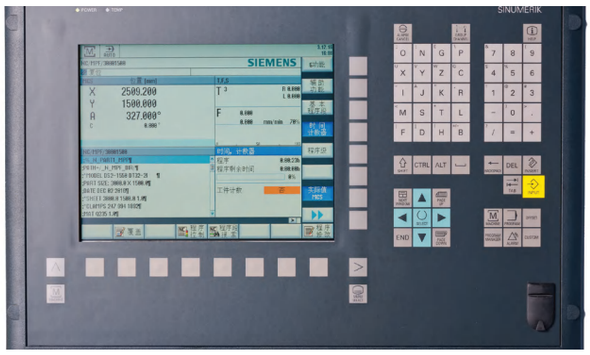

Multi Tooling Function

The multi Toolings are installed in the rotating station, and each set of multi tooling has 3 or 8 sub toolings. The multi toolings can increase the number of turret toolings, reduce tooling adjustment time, reduce tooling use costs, and increase machine flexibility. Each sub tooling can be used as a rotating tooling. The use of a rotatable multi tooling is equivalent to adding a rotating station to the machine, expanding the function of the machine, and reducing the cost of using the tooling.

Vacuum Waste Suction Installation

The vacuum waste suction pump will suck the waste in the lower tooling in time to prevent waste buildup and avoid damaging the parts and molds.

Anti-Dropping Clamp Device

Install the clamp anti-dropping detection switch to detect whether the sheet material is off the clamp in real time, and protect the safety of materials and personnel in time.

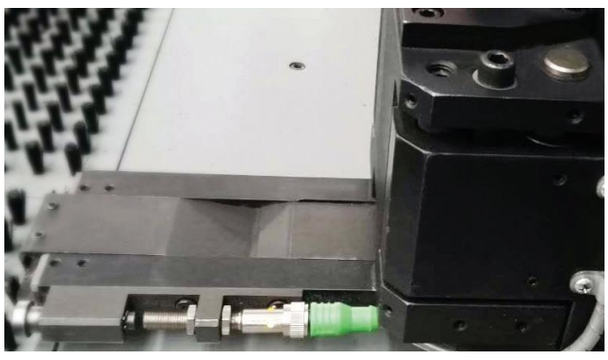

Automatic Clamp Device

After the program is started, the clamp will automatically adjust the position according to the position in the program without manual intervention, which improves production efficiency.

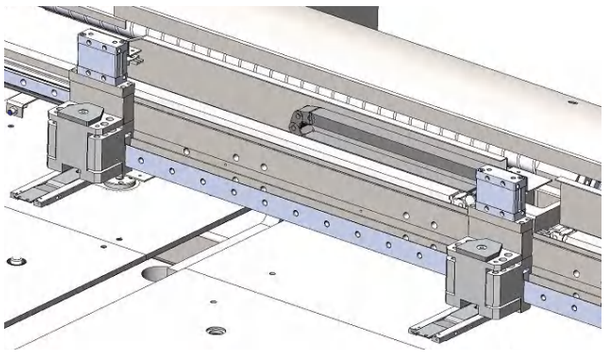

PARAMETERS - DAS			
Name	DAS3-1250	DAS3-1550	DAS3-2050
Press capacity (kN)	300	300	300
The Largest thickness (mm)	6.35	6.35	6.35
one-time punching maximum hole (mm)	Φ88.9	Φ88.9	Φ88.9
The largest processing sheet size (mm/m)	1250×5000	1500×5000	2000×5000
X,Y axis stroke (mm/m)	1250×2500	1500×2500	2000×2500
Position number	32	32	32
Maximum moving speed (m/min)	100	100	100
Turret speed (rpm)	30	30	30
The punching frequency (hpm)	1500	1500	1500
Number of control shaft	5	5	5
Punching precision (mm)	±0.10	±0.10	±0.10
Integrated power (kw)	6.5	6.5	6.5
Repeat precision (mm)	±0.03	±0.03	±0.03
Dimensions (mm)	4800×5120×2330	5300×5120×2330	6300×5120×2330
Weight (kg)	14000	15500	19000

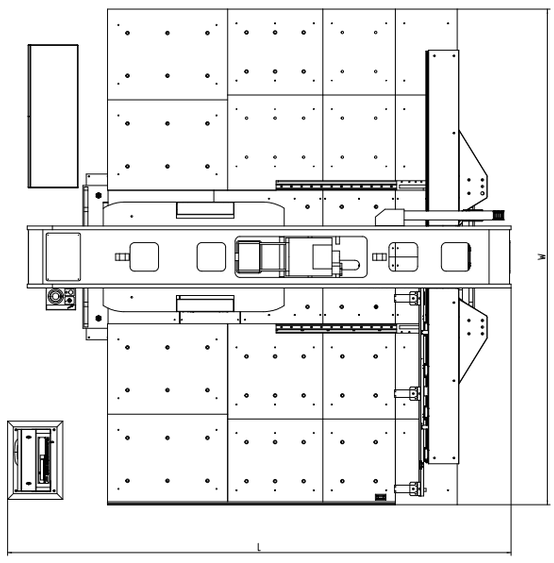

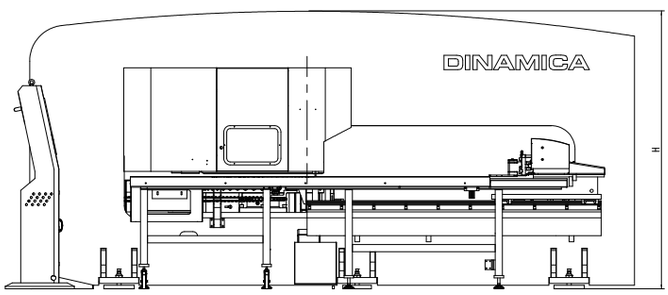

FMC
Automatic Stamping Flexible Machining Unit

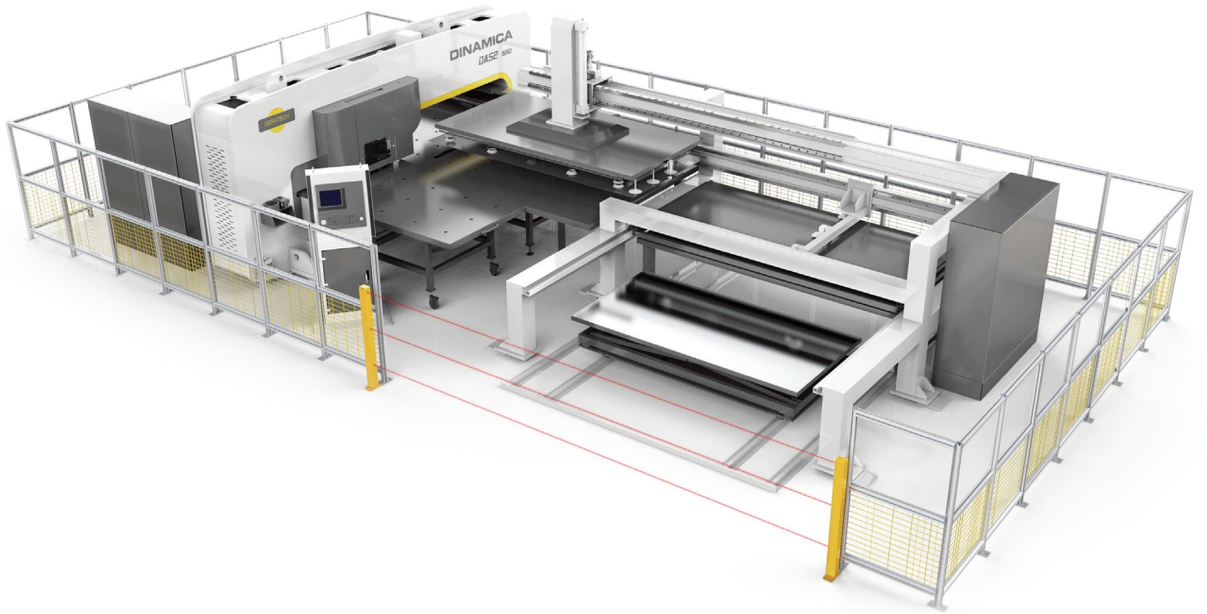

Production flowchart

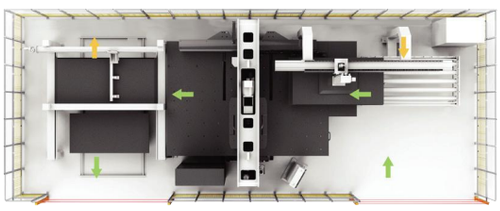

The automatic sheet stamping flexible processing unit integrates, through a PLC motion control system CNC punching machine and automatic loading and unloading device are highly integrated, which can realize the automatic loading, stamping processing and automatic unloading stacking, which effectively reduces the labor intensity of human operation and significantly improves production efficiency. The unit can realize the automatic loading, stamping and stacking of sheet material, which effectively reduces the labor intensity of human operation, significantly improves the production efficiency and saves cost. The double-sided stamping unit for loading and unloading and automatic unstacking of sheet material can effectively reduce the labor intensity of human operations, significantly improve the production efficiency and save costs. The double-sided punching unit loading and unloading devices are arranged on both sides of the punching machine. The double-sided punching unit loading and unloading devices are arranged on both sides of the punching machine, which is highly scalable and more efficient.

FMS
Sheet Shearing Flexible Processing System

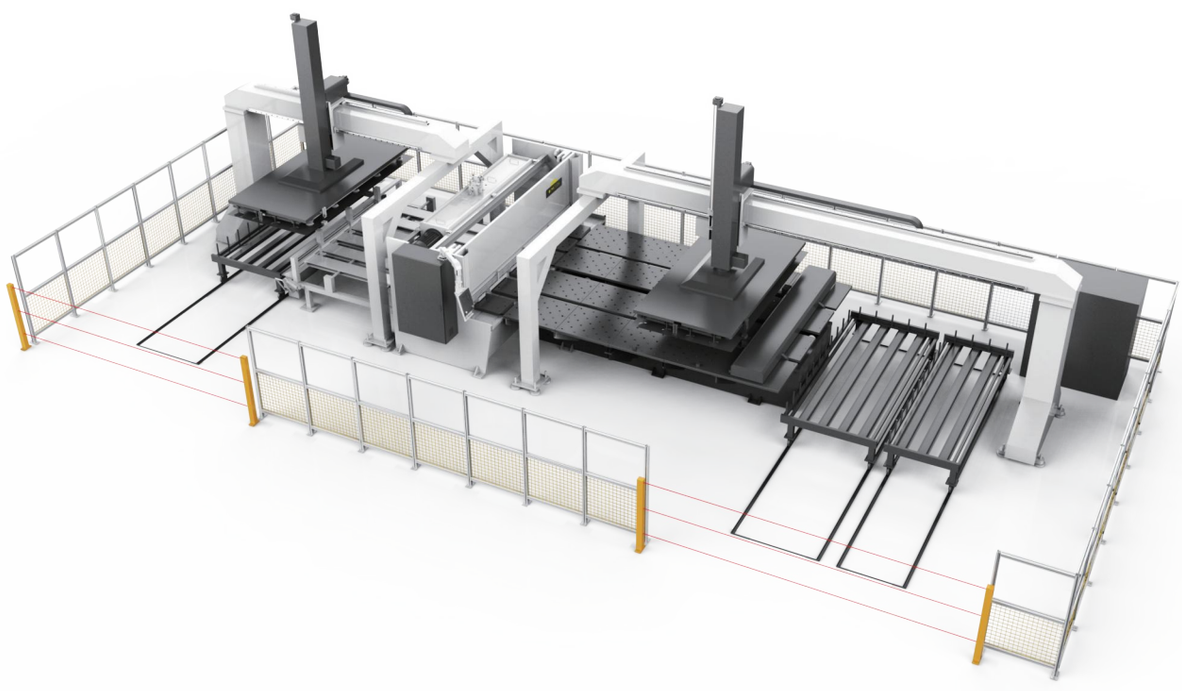

This processing system aims to improve the flexible and automatic production of shearing machine loading and unloading. The whole shearing center includes: the raw material is picked up by the automatic loading device, transferred to the front feeding device and sheared by the shear. The raw material is picked up by the automatic loading device, transferred to the front feeding device and sheared by the shear, and the sheared sheet is delivered by the automatic discharging device. The sheared sheet is sent out by the automatic discharge device, and is picked up and stacked by the automatic unloading device. The process can also realize the scrap The sheared sheet is delivered by the automatic discharge device and picked up and stacked by the automatic unloading device.

OPTIONAL CONFIGURATION

Automatic Loading Device

The combination of fixed loading table and automatic loading device can realize automatic loading after docking with machine tools (punching machine, laser cutting machine, etc.).

Automatic Unloading Device

The combination of unloading device and unloading lift cart is used for unloading the whole plate of the punching machine, and the unloading lift cart can be driven to any side of the unloading device for unloading.

Automatic Stocker

The automatic stocker consists of stocker, elevator and discharge dolly. It can store Pick up the board material and use it with machine tool docking.

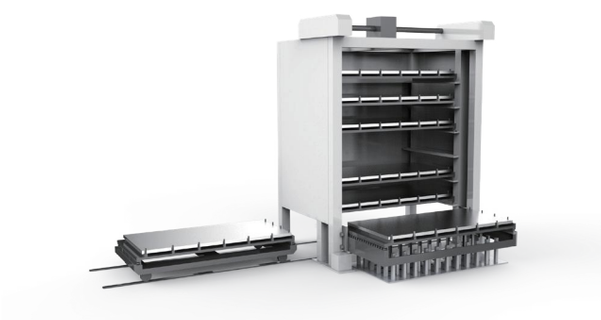

MES Software

Through networking of CNC machines in the workshop, comprehensive collection of equipment data is realized; centralized control of daily production, process flow and equipment maintenance can significantly improve the operational efficiency of the whole factory.

DERATECH

瑞铁机床

ADD: No.178 Shengjing Rd, Chengxiang Town, Taicang City, Jiangsu Province
TEL: +86-132-4026-6601
WEB: http://www.deratech.cn

ЧПМ ХХК
Эрчим хүчний гудамж 9-1
Улаанбаатар хот 16103
Монгол Улс
Утас 70104883
Е-мэйл info@bagaj.mn
Вэб www.bagaj.mn

WeChat
Official Accounts